Overhead Fault Detection using PLC

[1]Amina K. A. [2]Aryaraj B K [3]Sneha Antony [4]Mayuri Grace [5]Anjaly Mohanan
[1,2,3,4,5]ASIET, Kalady

Abstract

Transmission lines are the important factor of the power system. Transmission and distribution lines has good contribution in the generating unit and consumers to obtain the continuity of electric supply. Now a day in the transmission lines are ON/OFF are the major and important part in the power system. And also maintenance of the transmission line is also important part in transmission line. In the earlier system for the fault like overloading of the transmission line AB switches are used. The main disadvantage of old AB switch, is they can only operate manually. It requires man power and it has less reliability so, we are introducing automatic AB switch for the protection of overhead line against overload fault it is operated by PLC system. This AB switch can have operated remotely and no man power required on the fault location. It is more reliable and efficient than the old AB switches. The electric power system and advance devices has become a very complicated system because of re-structuring and the penetration of distributed generation and storage. In this system the automation link is made possible between the detection and the solution of problem in minimum amount of time.

Keyword- Power Line Communication, Fault Analysis, Alarm Indication

---

I. INTRODUCTION

The aim of this research is to develop a device used to detect faults in the line. This device involves the use of microcontroller for detection and isolation of the system of instrument with proper use of programming. The instrument devised is economical and effective compared to other protective devices available in market. The design methodology involves the use of microcontroller in conjugation with the relay circuitry with display on a LCD screen. Here, we use power line modem to transmit digital data from one transformer to another. If any discontinuity between communications channel, the information will send to the KSEB as text message. The GSM module that connected to the transformer is used to send message. The message includes all the information about transformers. It will help to KSEB workers to analyze the proper location of fault.

A fault in electrical equipment is defined as a defect in its electrical circuit due to which the current is diverted from the intended path. Faults are generally caused by mechanical failure, accidents, excessive internal and external stresses etc. The fault impedance being low, the fault currents are relatively high. During the faults, the power flow is diverted towards the fault and the supply to the neighboring zone is affected. Voltages become unbalanced. It is necessary to detect the fault as early as possible that is why a kit is being made using microcontroller to make its process faster.

II. BLOCK DIAGRAM

Power supply is given to microcontroller and power line modem. Android device is used to send data through Bluetooth. A Bluetooth module is used to receive data to the microcontroller. MAX232 Is used to convert RS232 to TTL logic and viceversa. In the status area there are data LED, transmission LED and a buzzer. They indicate when data is received and transmitted to the power line modem. The Embedded PLC Modem is in the form of a ready-to-go circuit module, which is capable of transferring data over the power cable at the low voltage end of the power transformer of a 3-phase/ 4-wire distribution network. In the receiver section, the power supply is given to the microcontroller.

A power line receiver is present at the end of transmission line. The data transmitted is received through the power line modem and given to microcontroller through MAX232. The received data is displayed in the 16x2 LCD. Also the received data is sends to the KSEB through GSM. A connection is given to the current transformer from the phase line. This current transformer senses the current and step down to 12V. This 12V is rectified and filtered and is given to a comparator. The comparator compares this voltage and a preset voltage set by the potentiometer. The error is given to microcontroller. If any fault is occurred, it is sensed and a message is send to the KSEB through GSM which contains the location about the transformer thus helping the KSEB workers to easily analyze the fault. The Fig1, Fig2 shows the transmitter and receiver side of the system described as a block diagram.

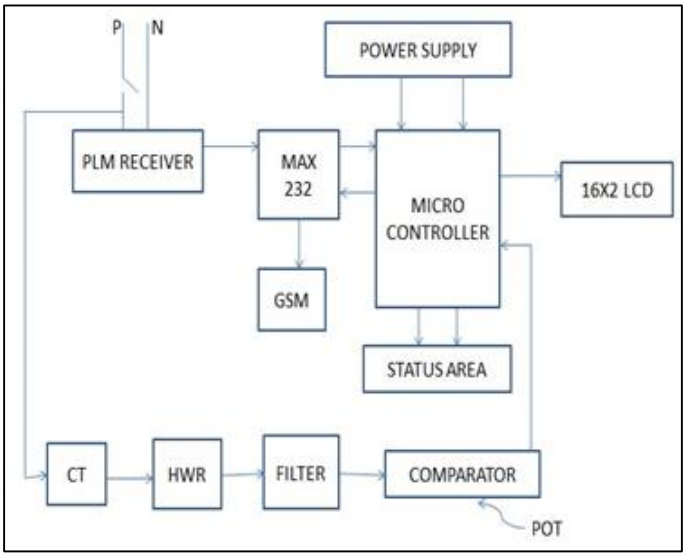

Fig. 1: Receiver side block diagram

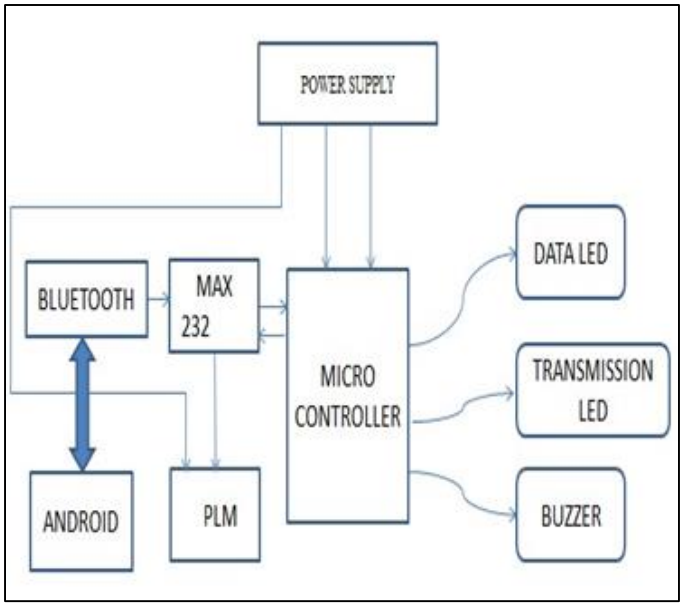

Fig. 2: Transmitter Side block diagram

III. COMPONENTS USED IN THE SYSTEM

The main parts in the system are:

- PIC Microcontroller
- Power supply
- Power Line Modem (PLM)
- GSM
- MAX 232
- Bluetooth
- LCD
- Resistor
- Capacitor
- Oscillator
- Power Supply

Power supply is a device or system that supplies electrical or other types of energy to an output load or group of loads. A simple AC powered linear power supply usually uses a transformer to convert the voltage from the wall outlet (mains) to a different, usually a lower voltage. If it is used to produce DC a rectifier circuit is employed either as a single chip, an array voltage of diodes

sometimes called a diode bridge or Bridge Rectifier, both for full wave rectification or a single diode yielding a half wave (pulsating) output. More elaborate configurations rectify the AC voltage at first to pulsating DC. Then a capacitor smooths out part of the pulses giving a type of DC voltage. The smaller pulses remaining are known as ripple. Because of a full wave rectification, they occur at twice the mains frequency. Finally, depending on the requirements of the load, a linear regulator may be used to reduce the ripple sometimes also allowing for adjustment of the output to the desired but lower

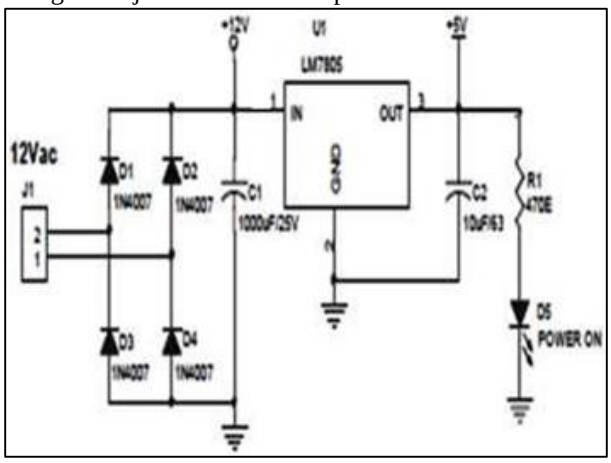

Fig. 3: Power supply section

– Voltage Regulator

Voltage sources in a circuit may have fluctuations resulting in not giving fixed voltage outputs. Voltage regulator IC maintains the output voltage at a constant value. 7805, a voltage regulator integrated circuit (IC) is a member of 78xx series of fixed linear voltage regulator ICs used to maintain such fluctuations. The xx in 78xx indicates the fixed output voltage it provides. IC 7805 provides +5 volts regulated power supply with provisions to add heat sink as well.

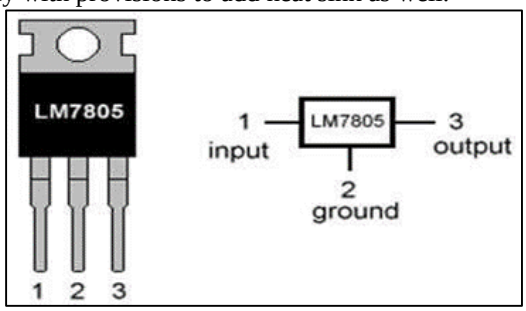

Fig. 3: Voltage regulator LM7805

– Bridge Rectifier

A diode bridge is an arrangement of four (or more) diodes in a bridge circuit configuration that provides the same polarity of output for either polarity of input. When used in its most common application, for conversion of an alternating current (AC) input into a direct current (DC) output, it is known as a bridge rectifier.

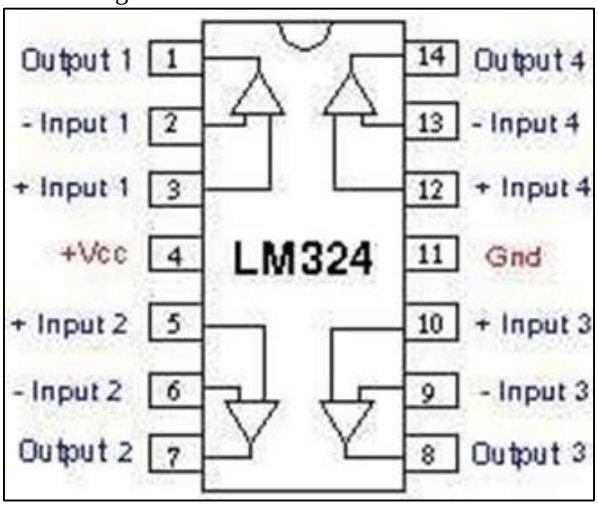

Fig. 4: LM324 bridge rectifier

– MAX 232

Max232 is designed by Maxim Integrated Products. This IC is widely used in RS232 Communication systems in which the conversion of voltage level is required to make TTL devices to be compatible with PC serial port and vice versa. This chip contains charge pumps which pumps the voltage to the Desired Level. It can be powered by a single +5 volts power supply and its output can reach +_7.5 volts. MAX232 comes in 16 Pin Dip and many other packages and it contains Dual Drivers. It can be used as a hardware layer convertor for 2 systems to communicate simultaneously. Max232 is one of the versatile IC to use in most of the signal voltage level conversion problems

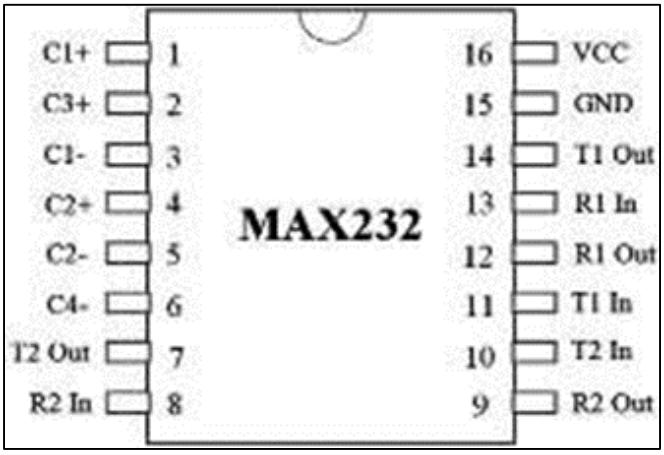

Fig. 5: MAX232 Pin diagram

– GSM Modem

This is a plug and play GSM Modem with a simple to interface serial interface. Use it to send SMS, make and receive calls, and do other GSM operations by controlling it through simple AT commands from micro controllers and computers. It uses the highly popular SIM300 module for all its operations. It comes with a standard RS232 interface which can be used to easily interface the modem to micro controllers and computers.

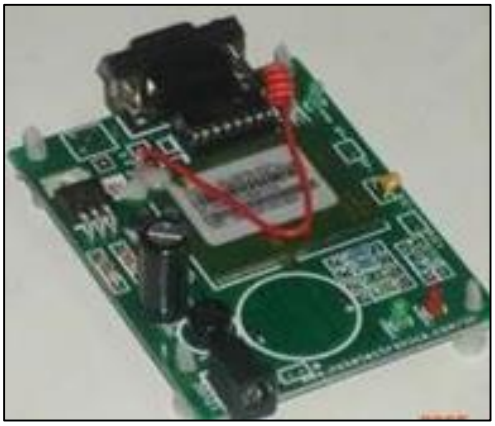

Fig. 6: GSM Module

– PIC Microcontroller

The PIC microcontroller PIC16f877a is one of the most renowned microcontrollers in the industry. This controller is very convenient to use, the coding or programming of this controller is also easier. One of the main advantages is that it can be write-erase as many times as possible because it uses FLASH memory technology. It has a total number of 40 pins and there are 33 pins for input and output. PIC16f877a finds its applications in a huge number of devices. It is used in remote sensors, security and safety devices, home automation and in many industrial instruments. An EEPROM is also featured in it which makes it possible to store some of the information permanently like transmitter codes and receiver frequencies and some other related data. The cost of this controller is low and its handling is also easy. It's flexible and can be used in areas where microcontrollers have never been used before as in coprocessor applications and timer functions.

– Bluetooth Module

Bluetooth Module is a Drop-in replacement for wired serial connections, transparent usage. You can use it simply for serial port replacement to establish connection between MCU and GPS, PC to your embedded project / Robot etc. The module can be configured for baud rates 1200 to 115200 bps. This is a Slave mode only Bluetooth Device. If you need a Master/Slave switchable device refer to this product: Bluetooth UART Module.

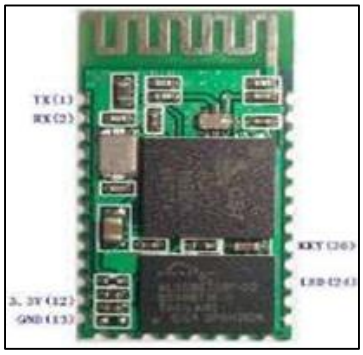

Fig. 7: Bluetooth Module

IV. SOFTWARE

An embedded hardware device, depending on its size and capabilities, can have an operating system such as embedded Linux with limited or minimal functionality compared to a desktop version. For very small embedded devices, an OS might be entirely absent: it is not possible to write programs, compile, and run and debug the code in such small devices. In such a situation, it is necessary to use cross compilers (or assemblers), which compile programs written in a high-level language on a host system (typically a PC) and generate code for a target system (for example, an embedded device). If we write assembly programs and use an assembler running on a host to generate code for a target device, it is a cross assembler. So, we can write programs on our PC generate code for the embedded device and run it there. This solves the problem of creating executable code for embedded systems, but testing, debugging or tracing embedded programs are difficult.

V. APPLICATIONS

– More Safe Transmission

In this PLM based power transmission there is more safety since compared to other existing communication systems where data to be sent is converted to RF frequency. Nowadays studies show that RF frequency is really harmful to human body. Thus power line communication is safer.

– Easy Determination of Fault in the Lines

GSM helps in sending text messages to KSEB regarding the location details and transformer details whenever detecting a fault in transmission line thus helping KSEB worker to instantly determine the location of fault.

– Clear Information About Fault

The message includes all the information about transformers. It will help to KSEB workers to analyze the proper location of fault and clear it as fast as possible.

VI. CONCLUSION

The aim of this research is to develop a device used to detect faults in the line. This device involves the use of microcontroller for detection with proper use of programming. The instrument devised is economical and effective compared to other protective devices available in market. The design methodology involves the use of microcontroller in conjugation with the relay circuitry with display on a LCD screen. Through PLC both data and power are transmitted through same channel. In the first phase of project, a literature study is done along with which circuit is designed and components are familiarized. Also both the future scope and applications of this system is done. In the second phase, PCB design, software setup and hardware completion will be accomplished. The prototype of the system described above is given in the Fig 8 below.

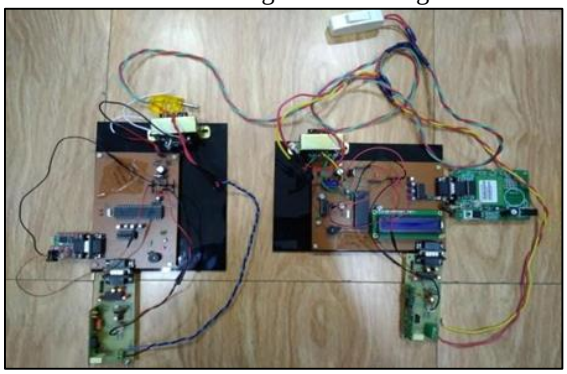
Fig. 8: Hardware prototype of the system

REFERENCES

[1] Alarm transmission for distributed energy resources over power line communication, Christoph Becker, Germany, IEEE 2012
[2] Power Line Communication, Andrew Marshall, IEEE 1992
[3] Bill Evjen, Scott Hanselman, Farhan Muhammad, Srinivasasivakumar, Devin Rader Programming in Embedded C 2nd Edition JOHN Wiley & Sons 2000
[4] Abhishek B. Sharma, Haifeng Chen, Min Ding, Kenji Yoshihira "Detection and Localization in Distributed Systems using Invariant Relationships" 2013 IEEE.
[5] E. Kallauer "Detection of High Impedance Faults Power Technologies" EPRI Final Report EL-2413 June 1982 Inc.
[6] Prof. M. S. Sujatha and Dr. M Vijay Kumar "On-line Monitoring and Analysis of Fault in Transmission and Distribution Line Using GSM Technique" 30th November 2011 IEEE. Vol. 33 No.2
[7] "Upper Bounding Fault Coverage by Structural Analysis and Signal Monitoring" Soumitra Bose and Vijay Gangaram Auburn University, 2006 IEEE.