Development of Real Time based Medicine Dispensing System for Elderly People

[1]Lekshmi S [2]Geethu Satheesh [3]Anson Thomas [4]Jithin Mohan
[1,2,3,4]Student
[1,2,3,4]Department of Electrical and Electronics Engineering
[1,2,3,4]Adishankara Institute of Engineering and Technology

Abstract

This paper presents an automatic medication dispenser (prototype) which help to dispense medicine on time to elderly people. The aim is to avoid irregularities in the dosage and the risk of mishandling. Taking medicines incorrectly can have serious consequences like delayed recovery, illness and even cause death of the person. The dispenser is realized using raspberry pi which help to control the functions of the system. When medication time is arrived a dose of medication is released and an audio alarm is generated. If the patient does not take the dose prescribed by the doctor, an SMS is sent to a phone number using GSM system .The system is a real-world prototype with LCD display, keyboard and fingerprint sensing for user friendly interface and low cost requirements.
Keyword- Automatic Medication Dispenser (Prototype), LCD Display, GSM System

I. INTRODUCTION

Improvement in electronic aid and the advert of affordable and ubiquitous information and communication technologies has deeply changed healthcare strategies in the recent past. Leaving unattended a medical treatment may have consequences, therefore constancy and discipline are needed to remember the time and dose indicated by treatment .Although it seem simple, people have trouble in remembering ,especially elderly people will possibly forget to take their medicine on time.

There are numerous existing medication dispensing systems. The simplest one is a pillbox with sound reminders but this holds pills in the same box so that there is a chance of mixing up of medicines. Many of them fails in terms of functionality and security for use of elderly people current devices just act as a reminder and cannot take action while the medicine is not collected.

The design of medication dispenser is intended for use in remote medication administration system. The system is a novel and innovative concept enabling supervised secure delivery of medication to patients and increase effectiveness in dispensing .Compared to existing system the new real time monitoring based system will remind the user to take medicine in the timings as prescribed by the physician. The fingerprint sensor system enhance the dispenser to provide patient identification and in take recognition.

II. WORKING PRINCIPLE

The novelty of the proposed approach is the adoption of a smart device not only for providing a user-friendly human-machine interface, but also for the automatic identification of the patient.
The system design mainly focuses on low cost requirement. The proposed architecture is open and easy to be interconnected with other smart device-based healthcare systems. The block diagram of the proposed system is shown below.

All rights reserved by *www.grdjournals.com*

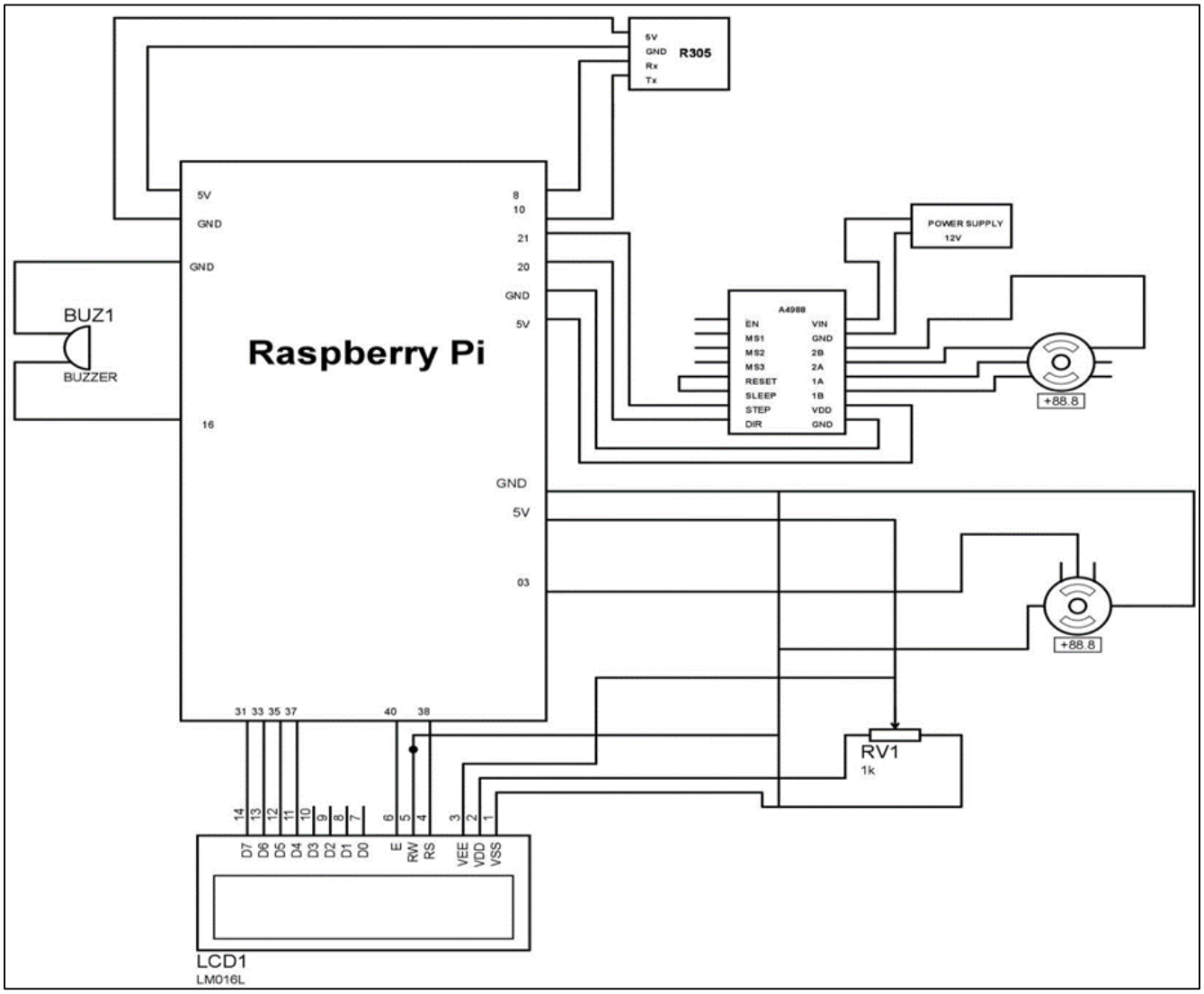

Fig. 1: Basic Block Diagram

The main control system used in the system is raspberry pi 3. The Raspberry Pi is a low cost, credit-card sized computer that plugs into a computer monitor or TV, and uses a standard keyboard and mouse.

Fig. 2: Raspberry Pi 3

All rights reserved by *www.grdjournals.com*

III. METHODOLOGY

This section describes the methodology of the proposed prototype system. The explanations consist of the system design and its external peripherals. Pills are installed in different compartments. Real time clock module is given and time is read from that. Compartment lid is provided and it will be in the reset position. Lid rotates above the compartments, so that lid opening will be aligned against the compartment, where the pill corresponding to time is kept. Buzzer and LCD indicator is provided. LCD used is LM016L. LCD controller is an alphanumeric dot matrix liquid crystal display (LCD) controller developed by Hitachi. The character set of the controller includes ASCII characters, Japanese Kana characters, and some symbols in two 28 character lines. Using an extension driver, the device can display up to 80 characters.

Fig. 3: LM016L LCD Display

Patient can take the pill, accessing lid rotation through the fingerprint sensor provided. The fingerprint sensor provided is R305 Fingerprint sensor module. Optical biometric fingerprint reader with great features and can be embedded into a variety of end products. The fingerprint sensor is with low power consumption, low cost, small size, excellent performance. Professional optical technology, precise module manufacturing techniques, good image processing capabilities, can successfully capture image up to resolution 500 dpi are the advantages of this fingerprint sensor module.

Fig. 4: Fingerprint Sensor Module

The fingerprint of the patient is already saved in the sensor module and when it's time to take the pills, according to the fingerprint input and matching the lid rotates and access to the pill is provided. For pill rotation NEMA 17 stepper motor is used.

Fig. 5: NEMA 17 Stepper Motor

All rights reserved by *www.grdjournals.com*

The step angle is about 0.9 or 1.8 degrees per rotation this 4-wire bipolar stepper has 1.8° per step for smooth motion and a nice holding torque. A4988 Stepper Motor Driver Carrier is used to driver the motor. A stepper drive is the driver circuit that controls how the stepper motor operates. Stepper drives work by sending current through various phases in pulses to the stepper motor. There are four types: wave drives (also called one phase-on drives), two-phase on, one-two phase-on drives and micro stepping drives. This stepper motor driver lets you control one bipolar stepper motor at up to 2 A output current per coil. The A4988 is a complete micro stepping motor driver with built-in translator for easy operation. It is designed to operate bipolar stepper motors in full, half, quarter, eighth, and sixteenth step modes, with an output drive capacity of up to 35 V and ±2 A. The A4988 includes a fixed off-time current regulator which has the ability to operate in Slow or Mixed decay modes.

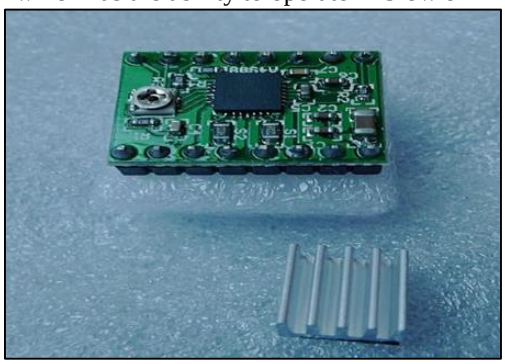

Fig. 6: A4988 Stepper Motor Driver

The main features are simple step and control interface. Adjustable current control lets you set the maximum current output with a potentiometer, which lets you use voltages above your stepper motor's rated voltage to achieve higher step rates.

IV. RESULTS

The smart dispenser is designed to eliminate two most common causes of administration error: misunderstanding of medication directions and inconvenience of rigid medication schedules. Being almost fully automatic, the dispenser schedules individual doses of the user's medications on time. Dispenser reminds the user at the times when doses should be taken, monitors user's response to reminders and adjust the medication schedule as needed. The main advantage of this design is in its generality and extensibility.

V. CONCLUSION

This paper summarized the major points about our MEDICATION DISPENSER. Elderly patients, especially ones with chronic and periodic medicine, will benefit the most for since it will greatly increase their medicine adherence which will insure a better treatment effectiveness or even save their lives. The user interface which is the same on all the devices including the machine is intuitive, clear and easy to use, even for elderly patients. The design allows the user to add more containers or more pills per serving.

REFERENCES

[1] C. Crema, A. Depari, A. Flammini, M. Lavarini, E. Sisinni, A. Vezzoli "A smartphoneenhanced pill-dispenser providing patient identification and in-take recognition" IEEE Instrumentation and Measurement Society 2012
[2] Wissam Antoun, Ali Abdo and Suleiman AlYaman, Abdallah Kassem, Mustapha Hamad and Chady El-Moucary "Smart Medicine Dispenser (SMD)" 2018 IEEE 4th Middle East Conference on Biomedical Engineering
[3] Sadiparala Charan Kumar Reddy, K.S.P.Sandeep, Obulam Siva Dheeraj Reddy, Aakash Bharadwaj "Enhancing Healthcare using m-Care Box (Monitoring non-Compliance of Medication)" International Conference on Innovative Mechanisms for Industry Applications 2017
[4] C. Parcas, I. Ciocan, N. Palaghita and R. Fizean "Weekly Electronic Pills Dispenser with Circular Containers" 2015 IEEE 21" international Symposium/or Design and Technology in Electronic Packaging
[5] Anitha Ilapakurti, Jaya Shankar Vuppalapati, Santosh Kedari, Sharat Kedari, Chitanshu Chauhan "iDispenser - Big Data Enabled Intelligent Dispenser" 2017 IEEE Third International Conference on Big Data Computing Service and Applications
[6] Timothy J. Gale and Clive R. Stack
[7] "Medication dispenser for narcotic rehabilitation patients" Annual International Conference of the IEEE EMBS 2006
[8] Nurmiza Binti Othman1 and Ong Pek Ek "Pill Dispenser with Alarm via Smart Phone Notification" 2016 IEEE 5th Global Conference on Consumer Electronics
[9] Huai-Kuei Wu,Chi-Ming Wong, Pang-Hsing Liu, Sheng-Po Pen, Xun-Cong Wang, Chih-Hi Lin and Kuan-Hui Tu "A Smart Pill Box with Remind and Consumption Confirmation Functions" 2015 IEEE 4th Global Conference on Consumer Electronics

All rights reserved by *www.grdjournals.com*