Modelling of Future Automatic Trolley System based on Sensors and Image Processing Guidance for Supermarket

[1]Divya T M [2]Aneeshya Soman [3]Abiraj K R
[1,2,3]Student
[1,2,3]Department of Electrical and Electronics Engineering
[1,2,3]Adi Shankara Institute of Engineering and Technology, Kalady

Abstract

This paper presents a small trolley system which provide fast purchase and great convenience to customers. The main objectives are to eliminate human labor to push trolley and to reduce the time of the queue in supermarket. Sensor technology, rfid, image processing is used in several areas. In this paper sensor technology is used to guidance the trolley system. This system can automatically follows the customer from rack to rack for collecting items and it maintains a safe distance between customer and itself. There is also a QR scanner facility to read the QR code of the product which the customer is taking and shows the price details and other details of the system. This design will reduce the efforts and time consumption of the user.
Keyword- Ultrasonic Sensor, RFID, QR Code, Raspberry Pi

I. INTRODUCTION

Nowadays there are lot of shopping malls are emerging. Shopping mall is a place where individuals get their everyday necessities ranging from sustenance items, garments, electrical machines and so forth. The people always need something to help them doing a works rather doing themselves because of their engaged life. In this inventive world, each malls and supermarkets utilize shopping trolleys to help customers to choose and purchasing the items which they expect to buy.

The existing manual trolley human labor is still required to utilize trolley. They still need to push the trolley or bring the basket from rack to rack so a lot of power to be done for shopping. Human effort needed to push and pull the trolley and while purchasing and after purchasing customers needed to wait in a long queue for payment of the bill. Spending a lot of time in the long queue is a troublesome process which resulting in a heavy crowd at the counters. The existing trolley have no automated billing system results in waste of time and waste of human effort. A considerable number of users will leave the queue if the line is too long. So, if there is a trolley that can be run automatically and follow the user will be easier and efficient.

Fig. 1: Existing Trolley

This automatic trolley system is an intelligent system which contributes as an efficient system in shopping mall to follow human and avoid the obstacles in the path. The movement of the system is controlled by the ultrasonic sensor and rfid tag. The QR scanner working in the based of image processing used to read the QR code of the product which the customer is taking and it shows the price and other details of the product.

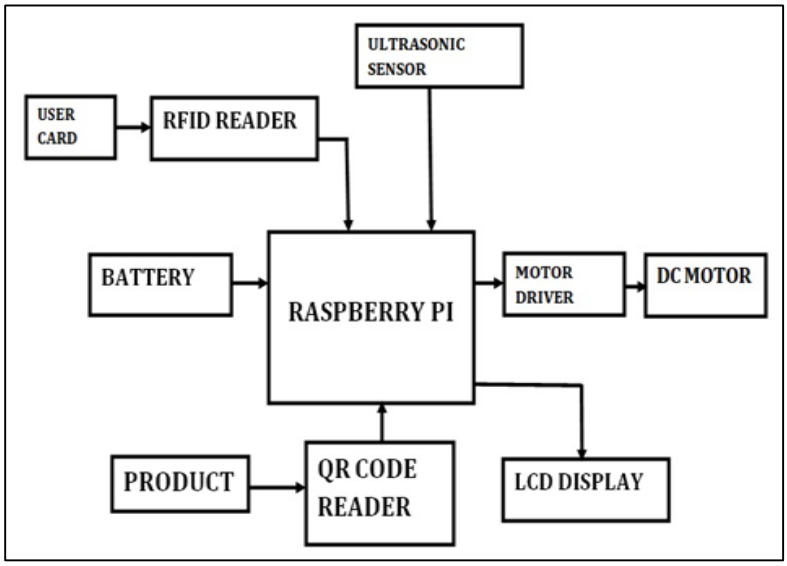

Fig. 2: block diagram of automatic trolley system

A. Working Principle and Explanations

1) Methodology

The development of the system starts with the design architecture of the proposed system. The block diagram of this system is as shown figure -2.sensors are well used to control the trolley system.

Fig 3: Raspberry PI 3

The movement of the system is controlled by the ultrasonic sensor, rfid, motor drives. The main part of the design is to make the human follower trolley using a raspberry pi programming and interfacing it with motors and sensors. The sensor used to control the desired parameters of the trolley system. So the sensors will transfer the gathered information to the controller which works the system to its requirements. As a result the trolley follows the customer for his needs.

The second part of the project is the QR scanning using image processing technique. A LCD display is used to store the database of the product list. This application will have the ability to scan the code of each product and show the details of the product like price of the product, weight, total cost of purchased items etc. to the customer. So they can easily get to know the total amount and can purchase according to their budget.

The proposed system starts to work when a customer gets into the mall and take the trolley. Each trolley has its own RFID reader. So the trolley follows the customer who has the corresponding RFID card called as user card. According to the signals transmitted and received by the sensors the trolley follows the human.

The trolley is programmed using raspberry pi programming and from the raspberry the commands are sending to the motors placed which are connected to the wheels. This controls the speed and the direction of the moving trolley is controlled by the transmitters and receivers placed. So that the trolley can escape from the obstacles in its path.

By using a trolley, humans do not need to feel bothered and will not get tired for carrying goods although it are quite lot.. So, if there is a trolley that can be run automatically, then bring the stuff will be easier and efficient.

II. RESULT AND DISCUSSION

A prototype of automatic trolley system is developed. The design of the whole project was done with altrasonic sensor, RFID, QR code, raspberry pi 3, motor driver, lcd display. All the wiring and connections are connected to the raspberry pi. The trolley is programmed using raspberry pi programming and from the raspberry the commands are sending to the motors placed which are connected to the wheels. This controls the speed and the direction of the moving trolley is controlled by the transmitters and receivers placed. The QR scanning using image processing technique. A LCD display is used to store the database of the product list. This application will have the ability to scan the code of each product and show the details of the product like price of the product, weight, total cost of purchased items etc. to the customer.

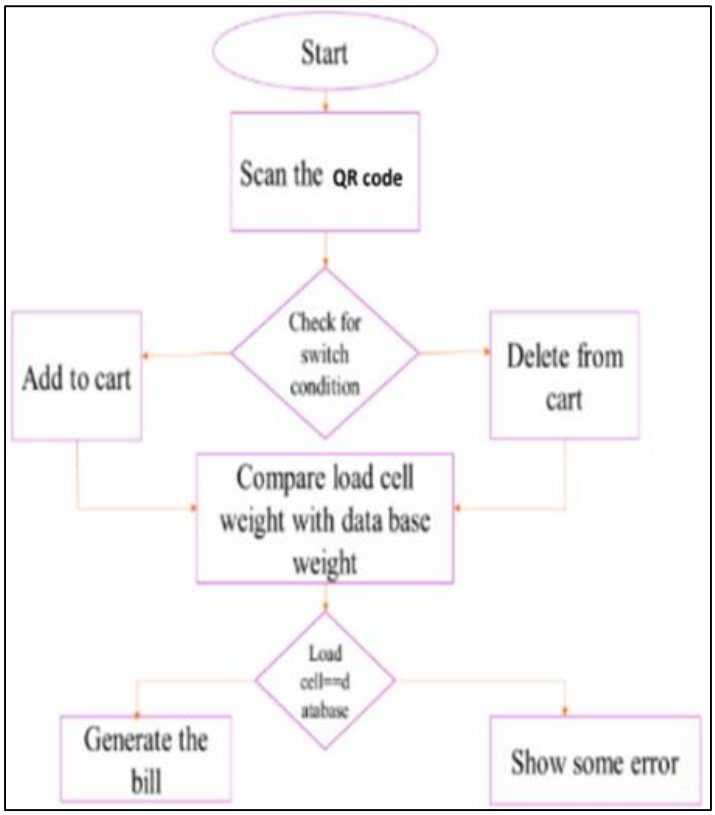

Fig. 4: flow chart of automatic trolley system

REFERENCES

[1] Smart Trolley in Mega Mall International Journal of Emerging Technology and Advanced Engineering Volume 2, Issue 3, March 2012) .S.Awati, S.B.Awati
[2] "Automated Shopping Trolley for Super Market Billing System " International Journal of Computer Applications (0975 – 8887) International Conference on Communication, Computing and Information Technology (ICCCMIT-2014) S.Sainath, K. Surender, V. Vikram Arvind
[3] "Automatic Shopping Trolley using Sensors" International Research Journal of Engineering and Technology (IRJET) Mr. Shrideep S. Anchan and Mr. Karthik Kamath
[4] "Automated Trolley for Shopping "International Journal of Innovative Research in Electrical, Electronics, Instrumentation and Control Engineering Vol. 5,Issue 6, June 2017 274 UGC Approved Journal Rajesh Nayak, Ravi S Raikar,Vishwas Student, E&C, SMVITM, Bantakal, Udupi, India