e-ISSN: 2455-5703

A Noble Method of Charging Electric Vehicle Battery Wirelessly using Microwave Technology

[1]Joyal Paul [2]Nabeel Muhammed Shajahan [3]Sreesaila Vishal [4]Tony Francis
[1,2,3,4]Adi Shankara Institute of Engineering and Technology, Kalady

Abstract

This paper presents smart charging of vehicle batteries using the microwave technology, the main objective is to increase the overall battery charging efficiency using microwave technology of a magnetron. This method helps in increasing the systems charging efficiency to 80% compared to the conventional plug in chargers, Also the problem with the charging ports can be resolved using this wireless technology. Another add on advantage in this technology is that it requires less amount of time for charging. The system consists of a transmitting system and a receiving system. The main component used are magnetron, rectenna, dc controller, metering device.
Keyword- Magnetron, Efficiency, Wireless Charging

I. INTRODUCTION

Electric cars have increased over the past few years, in addition the evolution of electric buses in KURTC has a stronger impact in the improving technology of Kerala. Charging of electrical vehicles are often considered difficult nowadays. Most common method of charging the EV's is through the conventional plug and charge method. There are a lot of difficulties in using this method. it is not user friendly i.e. for every time of charging we need to go and plug in the wire, sometime it will be difficult in case of public charging spot the adapter used will not be same as that in the vehicle. Therefore, in order to solve the problem of conventional method of wired charging, various wireless system of charging like inductive coupling and resonance coupling wireless transfer are being used.

We propose the concept of wireless power transfer via microwave for wireless charging of electric vehicle. It is having a high efficiency compares to the inductive coupling i.e. 75-80% efficiency can be obtained. Also it can be used for long distance charging.

II. METHODOLOGY

The proposed methodology of the system is that the charging source will be kept on the ground, later the antenna part will be equipped inside the car at the bottom position, as shown in fig1.

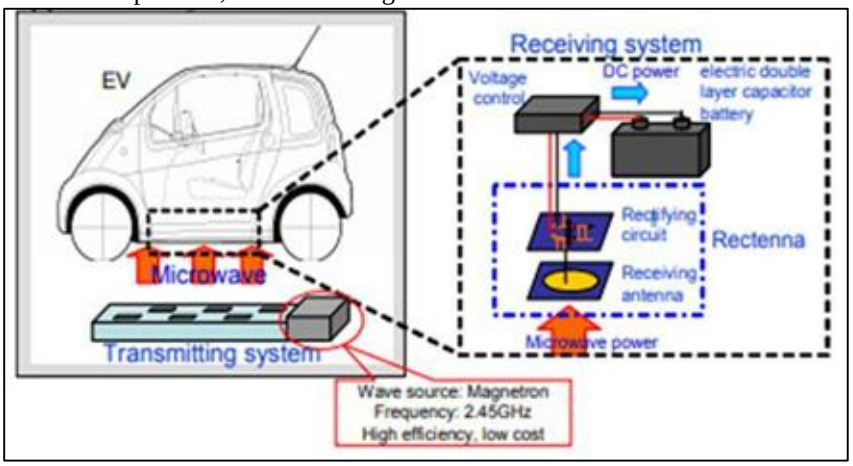

Fig. 1: Implementation Diagram

III. POWER TRANSFER THROUGH MICROWAVE TECHNOLOGY

Convert the electrical energy into microwave energy through the magnetron, send the microwave beam by the transmitting antenna, turn the microwave energy into the electrical energy through the rectifying device after receiving antenna. Microwave phased array

transmitter will produce beam at 2.45 GHz and 5.8 GHz frequency from DC power and emit to vehicle's rectenna which is set beneath the vehicle. Finally, rectenna will convert the beam back to DC energy and store it via various mechanical (i.e. flywheel) and electrical devices (i.e. battery, supercapacitor). In hybridized energy storage system has been exploited to merge the energy storage requirements in terms of energy storage capacity and peak power. Li-ion battery has been proposed to store energy for operating vehicles. But to further improve its performance & retain its capacity, nanostructured Si anodes (i.e. double walled nanotubes, yolk-shell nanoparticles) are introduced to meet the requisites of vehicular applications. And supercapacitors are the most viable option for high power demand because of its rapid discharging properties.

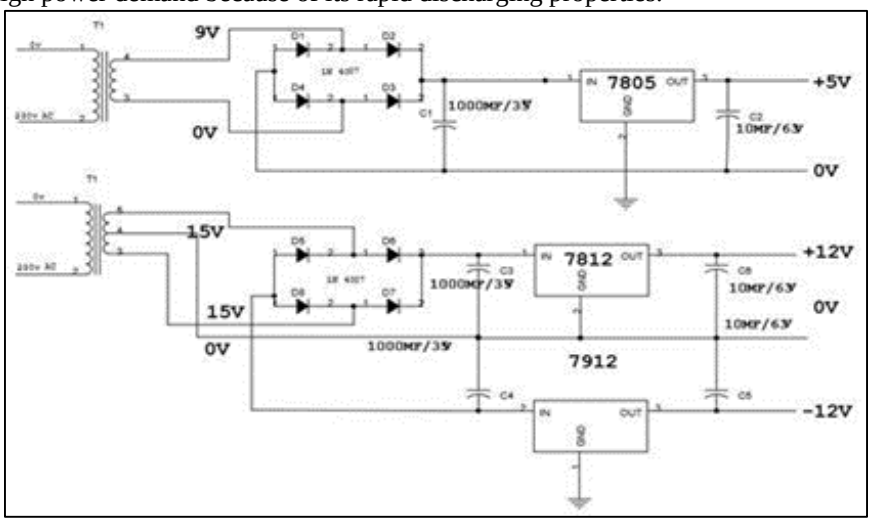

Fig. 2: Power Supply Circuit

IV. MOSFET DRIVER CIRCUIT OPERATION

A. Mosfet Driver Section

The mosfet driver section is consists of

- Optocoupler section
- Current boosting section
- Power section

B. Optocoupler Section

In electronics, an opto-isolator (or optical isolator, optocoupler, photocoupler, or photoMOS) is a device that uses a short optical transmission path to transfer a signal between elements of a circuit, typically a transmitter and a receiver, while keeping them electrically isolated - since the signal goes from an electrical signal to an optical signal back to an electrical signal, electrical contact along the path is broken.

They are used to isolate low-current control or signal circuitry from transients generated or transmitted by power supply and high-current control circuits. The latter are used within motor and machine control function blocks.

C. Current Boosting Section

A current source is an electrical or electronic device that delivers or absorbs electric current. A current source is the dual of a voltage source. The term constant-current sink is sometimes used for sources fed from a negative voltage supply.

D. Power Section

An inverter is an electrical device that converts direct current (DC) to alternating current (AC); the converted AC can be at any required voltage and frequency with the use of appropriate transformers, switching, and control circuits.

Static inverters have no moving parts and are used in a wide range of applications, from small switching power supplies in computers, to large electric utility high-voltage direct current applications that transport bulk power. Inverters are commonly used to supply AC power from DC sources such as solar panels or batteries.

The electrical inverter is a high-power electronic oscillator. It is so named because early mechanical AC to DC converters were made to work in reverse, and thus were "inverted", to convert DC to AC.

The inverter performs the opposite function of a rectifier.

An inverter converts the DC electricity from sources such as batteries, solar panels, or fuel cells to AC electricity. The electricity can be at any required voltage; in particular it can operate AC equipment designed for mains operation, or rectified to produce DC at any desired voltage.

Grid tie inverters can feed energy back into the distribution network because they produce alternating current with the same wave shape and frequency as supplied by the distribution system. They can also switch off automatically in the event of a blackout.
Micro-inverters convert direct current from individual solar panels into alternating current for the electric grid.

E. Induction Heating
Inverters convert low frequency main AC power to a higher frequency for use in induction heating. To do this, AC power is first rectified to provide DC power. The inverter then changes the DC power to high frequency AC power.

F. HVDC Power Transmission
With HVDC power transmission, AC power is rectified and high voltage DC power is transmitted to another location. At the receiving location, an inverter in a static inverter plant converts the power back to AC.

G. Variable-Frequency Drives
A variable-frequency drive controls the operating speed of an AC motor by controlling the frequency and voltage of the power supplied to the motor. An inverter provides the controlled power. In most cases, the variable-frequency drive includes a rectifier so that DC power for the inverter can be provided from main AC power. Since an inverter is the key component, variable-frequency drives are sometimes called inverter drives or just inverters.

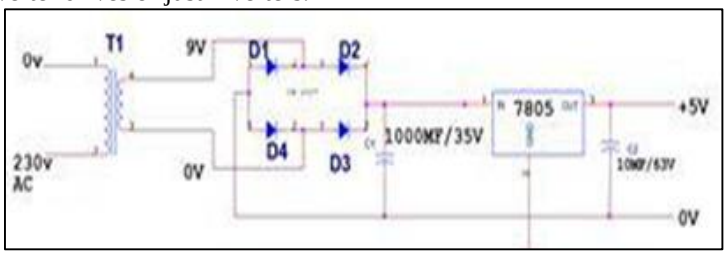

Fig. 3: +5v power supply

V. CONCLUSION

Nearly all of our communications are now wireless, but people and devices are still tethered to the wall by power cords. In the not too distant future, we'll be able to enjoy wireless power that are more efficient and reliable to the present scenario.

It is clear that microwave power transmission would be extremely beneficial to society if it were implemented in homes and home electronics. From an environmental standpoint, this technology could replace disposable batteries and cords, reducing dangerous chemicals and potential for poisoning communities. The new system will increase the efficiency and convenience of these electronics, while lowering the environmental impact in the long run. Some people will continue to worry about the health risk of being exposed to the magnetic field caused by the microwaves, but the researchers were being developed to avoid such complications and health hazards.

The disadvantages of the wireless power are greatly outweighed by the benefits and from an ethical standpoint, thus it is necessary to further develop wireless power technology to the point of large-scale production. It is now the matter of obligation to create wireless power on mass scales for the betterment of society.

REFERENCE

[1] Md. Sazzad Hossain, Amit Barua "Charging of electric vehicle via microwave energy transmission and analysis of advanced energy storage system" Rajshahi University of engineering & technology, Rajshahi, Bangladesh (2013)
[2] Naoki Shinohara, Yuta Kubo, Hiroshi Tonomura "Wireless Charging for Electric Vehicle with Microwaves "Research institute of sustainable Humanosphere Kyoto University, Gokasho, Uji, Kyoto, 611-0011, Japan 2013
[3] Suh NP, Cho DH, Rim CT"Design of On-Line Electric Vehicle (OLEV)" Plenary Presentation, CIRP Design Conference, Nantes, France,2010