Smart Water Management System using Arduino

[1]Dona Jose [2]Taniya John [3]B. Nithya
[1,2]UG Scholar [3]Assistant Professor
[1, 2,3]Christ the King Engineering College, Karamadai, Coimbatore, Tamilnadu, INDIA

Abstract

Smart water management system is one of the basic necessities in the present scenario. Solar energy is the best green energy generation in India. Solar power operated agriculture pumps are available in the market today. The problem is in the effective usage of solar power, water and their savings. So it is necessary to store solar power in the battery and water quality and level indicating techniques are used to effectively manage the water system. The pure water is given to the domestic purposes and impure water is given to the agricultural purposes according to the quality of the water. The level indicator warns the user about the level of water in the underground and overhead tanks. The solar powered water pump automatically switches on or off according to the level of the water in the tank. The impure water is sprayed into the field according to the moisture and temperature level in the water. All this techniques are controlled using Arduino. Using the controller it will send the notification to the user. Users can save the energy and water by sensing and analyzing the information via mobile applications.
Keyword- Cloud Computing, Arduino, Sensors, pH, Turbidity

I. INTRODUCTION

The increasing demand placed on the global water supply threaten biodiversity and the supply of water for food production and other vital human needs. Water shortages already exist in many regions, with more than one billion people without adequate drinking water. In addition, 90% of the infectious diseases in the developing countries are transmitted from polluted water. Agriculture consumes about 70% of fresh water worldwide; for example, approximately 1000 liters of water are required to produce 1 kilo gram of cereal grain, and 43000 liters to produce 1 kilo gram of beef. New water supplies are likely to result from conservation, recycling, and improved water use efficiency rather than from large development projects.

Global fresh water demand has been increasing rapidly. In addition to threatening the human food supply, water shortages severely reduce biodiversity in both aquatic and terrestrial eco systems, while water pollution facilities the spread of serious human diseases and diminishes water quality.so the efficient usage of water is necessary to meet our future demands. The farm irrigation systems in the previous years used simple timers and switches to control the irrigation mechanism for a predetermined time period irrespective of the weather conditions or moisture content present in the soil. By incorporating various advanced sensing and controlling techniques, the crop yield has increased to some extent while simultaneously the labor costs have decreased. However, the major drawback of these techniques are that they are complex in design to fit in the cultivation land and expensive. Thus there is a need for wireless technologies and automation in agriculture farming. Many wireless technologies were used in agriculture field such as remote sensing, global positioning system and geographical information system. Hence wherever automation had been implemented and labor being replaced by automatic machineries, the crop yield has improved significantly.

In the next century, planet earth will on an electronics skin.it will use the internet as a scaffold to support and transmit its sensations. Arduino is an open source computer hardware and software company project, and user community that designs and manufactures single board micro controllers and micro controllers kits for building digital devices and interactive objects that can sense and control objects in the physical world.

Arduino uno microcontroller can sense the environment by receiving input from a variety of sensors and can effect its surroundings by controlling lights motors and other actuators. The micro controller is programmed using the arduino programming language and the arduino development environment. The sensed values are monitored using the android apps. Since it is an open source platform everyone can easily access the system.

II. BLOCK DIAGRAM

Water pump is worked with the help of solar energy and it is stored in a battery. The sun ray's fall on the solar panel is converted into electricity by photovoltaic effect. The photovoltaic effect is a process that occurs in some semiconducting materials, such as silicon. At the most basic level, the semiconductor absorbs a photon, exciting an electron which can then be extracted into an electrical circuit by built-in and applied electric fields. The output from the solar panel can be controlled using buck boost converter and is stored in the battery. The circuit below is a buck converter.

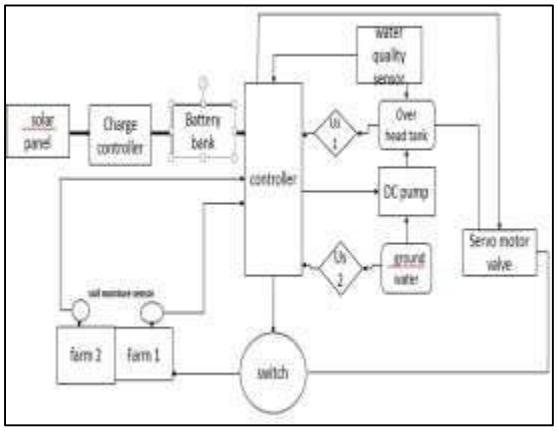

Fig. 1: block diagram of smart water management system using arduino

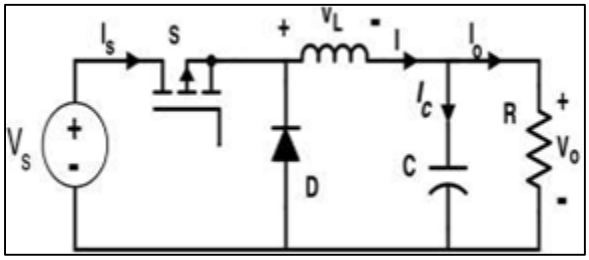

Fig. 2: Buck Boost Converter

The switch is turned on and off periodically: ton is the time it is on, toff is the time it is off and T=ton+toff is the period. We can also define duty cycle as D=ton/T the fraction of the period the switch is on. For the sake of simplicity, we assume that the ripple in the output voltage is so small that we may consider it constant during a cycle. This is known as the small-ripple approximation and really simplifies our calculations. Let's analyze separately the circuit when the switch is on and when it is off.

Water quality is measured based on the turbidity and pH level in water by using water quality sensor Turbidity Sensor is used to measure the turbidity of underground water to determine water quality. It measure the amount of light that is scattered by the suspended solids in water. As the amount of total suspended solids (TSS) in water increases, the water's turbidity level increase. Water quantity level is measured and the pump is controlled using the control circuit. The ultrasonic sensor is used as the water level indicator. It automatically switches the pump on\off according to the preset water level in the tank. The Ultrasonic Sensor sends out a high-frequency sound pulse and then times how long it takes for the echo of the sound to reflect back

$$\text{Distance}=\frac{time*speed\ of\ sound}{2}$$

DC powered pumps use direct current from solar power. Motorized pumps typically operate on 12 volts of DC power. If ultrasonic sensor 1 indicates low signal then DC pump will be turned on automatically, If ultrasonic sensor 1 indicates high signal then DC pump will be turned off automatically, If ultrasonic sensor 2 indicates low signal then dc pump will be turned off irrespective of ultrasonic sensor1.

Water is tripped on to the field according to the moisture and temperature content of the soil Soil moisture sensors measure the volumetric water content in soil. It measure the volumetric water content indirectly by using some other property of the soil, such as electrical resistance, dielectric constant, as a proxy for the moisture content. It senses the relative humidity including both temperature and moisture of the soil. It is expressed as percentage values. Based on input Soil moisture sensor and Water quality sensor, servo motor and switch will be operated. If soil moisture sensor 1 indicates high, then servo motor valve should turn ON and switch will divert the water to farm 1. If soil moisture sensor 2 indicates high, then servo motor valve should turn ON and switch will divert the water to farm 2. If water quality sensor is low the servo motor valve will be turned OFF irrespective of conditions.

III. SOFTWARE DEVELOPMENT

Arduino is an open-source electronics platform based on easy-to-use hardware and software. Arduino boards are able to read inputs - light on a sensor, a finger on a button, or a Twitter message - and turn it into an output - activating a motor, turning on an LED, publishing something online. You can tell your board what to do by sending a set of instructions to the microcontroller on the board. To do so you use the Arduino programming language (based on Wiring), and the Arduino Software (IDE), based on Processing.

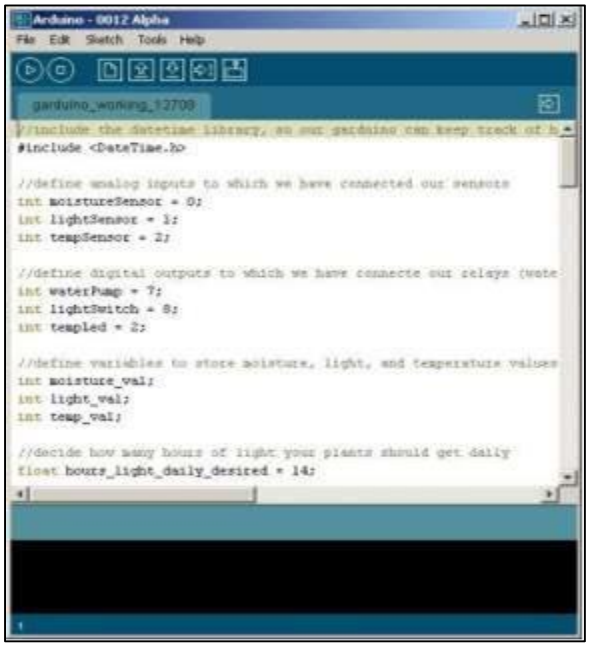

Fig. 3: Arduino Programming

Over the years Arduino has been the brain of thousands of projects, from everyday objects to complex scientific instruments. A worldwide community of makers - students, hobbyists, artists, programmers, and professionals - has gathered around this open-source platform, their contributions have added up to an incredible amount of accessible knowledge that can be of great help to novices and experts alike.

Arduino was born at the Ivrea Interaction Design Institute as an easy tool for fast prototyping, aimed at students without a background in electronics and programming. As soon as it reached a wider community, the Arduino board started changing to adapt to new needs and challenges, differentiating its offer from simple 8-bit boards to products for IoT applications, wearable, 3D printing, and embedded environments. All Arduino boards are completely open-source, empowering users to build them independently and eventually adapt them to their particular needs. The software, too, is open-source, and it is growing through the contributions of users worldwide.

IV. ANDROID APP DEVELOPMENT

The Android operating system is a multi-user Linux system in which each app is a different user.By default, the system assigns each app a unique Linux user ID (the ID is used only by the system and is unknown to the app). The system sets permissions for all the files in an app so that only the user ID assigned to that app can access them.

Fig. 4: working model of the android application model

An app can request permission to access device data such as the user's contacts, SMS messages, the mountable storage (SD card), camera, and Bluetooth. The user has to explicitly grant these permissions. For more information, see Working with System Permissions.

V. HARDWARE DESIGN

The interface device which we are using can automatically discover sensors linked to it and collect multiple sets of sensor data accurately & parallel with high-speed. Arduino board is used as the interface device, which helps in controlling data acquisition, processing, and transmission perfectly, & performs pre-processing on collected data.

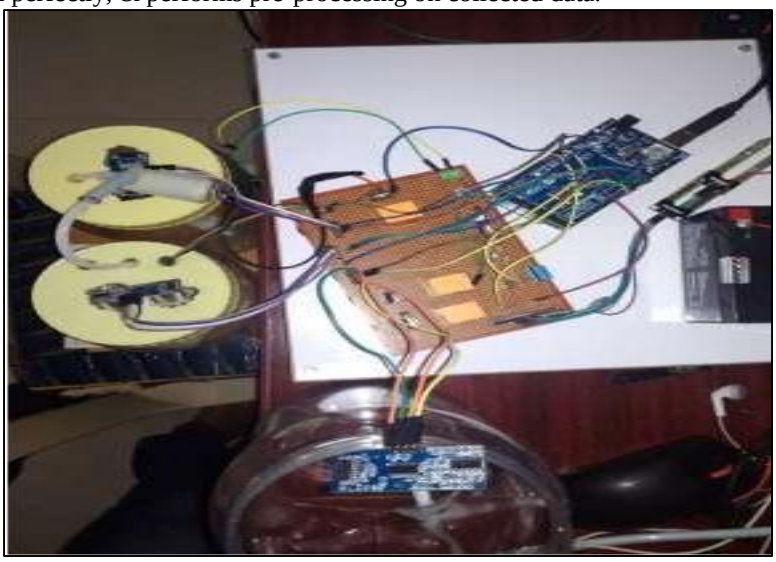

Fig. 5: Hardware implementation

VI. RESULT AND CONCLUSION

As per the proposed system, we have implemented the hardware as shown in Fig.5 and using embedded C coding in Arduino IDE. Fig. 4 depicts the corresponding results obtained by processing the data received from different sensors such as temperature, turbidity, humidity and moisture and level sensor of water. These sensors are sensing the physical parameters and providing them to the connected. Galileo Gen 2 board, where all these signals are processed. The value of level of water is measured directly. But the other parameters like pH and turbidity have to be caliber. PH sensor converts the pH level into the corresponding voltage value, thus measuring the proper voltage we have got the actual pH value. From 0 to 6 pH value the water is acidic, from 8 to 14 it is basic and at value 7 it is neutral. Thus according to these ranges we have decided whether the water is acidic, basic or neutral.

This project reduces the labor costs and also helps to track the changes accurately occurring instantly in real time at the field. The proposed system is capable of controlling the essential parameters necessary for plant growth. So this proposed smart agricultural system of farming is user friendly and highly reliable and also it reduces the over usage of water consumption.

REFERENCE

[1] D. CITHARTHAN, T.JONAH GILBERT “IoT- Analyzing Humidity and Temperature Using Arduino Microcontroller and ESP8266”
[2] Design of small photovoltaic solar powered water pump systems, natural resources conservation services october 2010
[3] Central ground water board ministry of water resources government of india faridabad 2010
[4] 1Michael D. Dukes, Mary Shedd, and Bernard Cardenas-Lailhacar2”Smart Irrigation Controllers: How Do Soil Moisture Sensor (SMS) Irrigation Controllers Work”
[5] A.N.Prasad, K. A. Mamun, F. R. Islam, H. Haqva”Smart Water Quality Monitoring System”
[6] Prashant Salunke, Jui Kate “Advanced Smart Sensor Interface in Internet of Things for Water Quality Monitoring” Feb 24-26, 2017
[7] K.Lokesh Krishna, Omayo Silver, Wasswa Fahad Malende “Internet of things application for implementation of smart agriculture system” 2017