Ex Rob - A Reverse Arsonist

[1]Akhila Ganesh [2]Krishna C [3]Manju P. M [4]Varsha Boban [5]Mrs. Vinila M. L
[1,2,3,4]Student [5]Assistant Professor
[1,2,3,4,5]Department of Applied Electronics and Instrumentation Engineering
[1,2,3,4,5]Adi Shankara Institute of Engineering and Technology, Ernakulam, Kerala, India

Abstract

An efficient and inexpensive energy source, coal provides stable and large scale electricity generation. Coal mining has some problem associated with it. Mine collapse, coal dust, mine explosion are a few such. Out of these coal mine explosion can be the most disastrous. Safety on site is all about removing the possible risk from the job and miner from hazardous operation. Fire accidents may occur due to explosive or flammable materials. They can be prevented by taking safety measures. Robots are best and efficient way for taking these safety measures. So we are developing a ROBOT to detect fire and rescue from fire. Various sensors like temperature, humidity, gas sensors are employed to measure temperature, humidity level and presence of toxic gases. All the sensed parameters are then transmitted to monitoring station through a microcontroller (ATMEGA328).so that information regarding the underground climatic condition is obtained. Image signal processing is used to detect the fire. Alarming and alerting unit is used for indication of fire. We use microcontroller in the control unit that tend to act as a brain.
Keyword- Robot, Coal, Sensors, ATMEGA328

I. INTRODUCTION

An efficient and inexpensive energy source, coal provides stable and large-scale electricity generation. Coal provides around 40% of the world's electricity. Coal mining like any kind of mining and coal usage, like the use of any kind of earth resources, has problems associated with it. The rise in accident frequency rate of various mining and milling operations in recent years has led everyone to take a closer look to determine the causes behind this increase. Coal mining always been a hazardous occupation from the beginning of the industry. Coal miners have faced dangers from mine collapse, coal dust, mine explosion, haulage equipment, machinery explosions of gas and dust etc. Out of these coal mine explosions can be the most disastrous. The mine explosions are likely to happen during coalification, the process which transforms organic material to coal, is an on-going process. Coalification process will generate methane gas which is very explosive. Modern mining operations work very hard to ventilate the mine with an intention to prevent accumulation of toxic gases from building up. In case if there is a spark around, the methane gas can be ignited and will in turn cause coal mine explosion. Underground coal miners usually work around 12 to 14 hours a day. The coal industry takes the issue of safety very seriously. Safety onsite is about removing all the possible risks from the job, and the miner from the hazardous operations that are likely to happen. Nothing is more important to the coal industry than ensuring our people return home safely at the end of the working day.

The main motivation of our project is to replace the human operating firefighting system by an autonomous fire extinguishing system. We wish to build a Robotic system to extinguish the fire with more proficient than already existing systems such as manual operating fire engines, fixed extinguishers at wall or ceiling and etc. Our intelligent Robotic system may offer a best solution to this problem. This Robot uses combination of two techniques to extinguish fire. They are image processing and electronic temperature sensors. It can take safety measures independently and alarming so it provides optimizing performance.

A. Objective

The main objective of this project is to design and test a robot which is capable of extinguishing fire inside deep coal mines and effectively replacing a firefighter in highly dangerous situations. These robots can also be used as a fire extinguisher in huge buildings, industries etc…. The proposed model allows rescuers to scout a burning building or mine before sending any firefighters or workers inside. The implementation of this robot will increase the safety of firefighters and therefore helps to mitigate deaths from unsafe conditions.

The implementation of this robot will also help in the

- Safety of coal miners.
- Preservation of our natural resource (coal).
- Continuous monitoring of the work area.
- Fire detection and its prevention.
- Maintenance of a safe working environment for underground coal miners.
- Reducing the depth of risks and injuries.

II. LITERATURE SURVEY

K. Sahulhameed, W. Newton David Raj (2014), artificial eye and sensory based intelligent robot for fire extinguishment task [1]: Robots performs its best when it comes to take safety measures. So the main objective of this paper was to develop an autonomous Fire Fighting Robot to detect and extinguish fire by the application of image signal processing and sensory methods.

These robots replace the human operated fire resisting system by an autonomous fire extinguishing system. This model will replace the existing systems such as manually operating fire engines, fixed extinguishers at wall or ceiling etc.

This model utilizes multisensory interfacing and image signal processing for detecting fire. Image processing is considered as one of the best ways for detecting fire. The multisensory unit contains smog sensors, temperature sensors and flame sensors which can detect the variations in the surroundings.

The model described in this paper is operated on the basis of artificial intelligence and it requires six major blocks for its working. A micro controller acts as the control unit and the multisensory unit and the image processing units helps in the detection of fire. It is also developed with an obstacle detector and an alarming unit in case of any urgency. An extinguishing block is also provided for assisting the safety measures.

G. Divya, B.A.Sarath Manohar Babu (2015), Rescue System for Coal Mine Workers using Different Sensors Based on GSM and RF-PRO[3]: This paper discusses about the implementation of complete surveillance and safety measures for people working in the coal mines. The model explained in this paper contains a MEMS based sensory network which monitors the underground parameters and passes the data collected to a control station.

The system described in this paper is developed after considering all the existing and possible parameters which is, it can sense temperature, pressure, humidity, Fire, Gas as well as a person's fall.

An MEMS based accelerometer id used to detect the person's fall. ARM processor is used here as the control unit. It fetches the datas from all the sensors and if any critical issue is detected it immediately informs the control station through a perfect communication network provided to the system and alerts everyone. For maintaining a perfect communication network, RF based communication is used here.

A GSM network is also implemented to inform the nearest rescue station.

Puneet Sharma, Chandni Goel, Sorabh Datta and Sukhwinder Singh Dhillon, Fully Automated Fire Fighting Robot with Radio Frequency Module (2016)[2]: This paper describes about developing an automated robot which has better heat resistant properties under high temperatures. This robot can automatically detect fire using various sensors and also it can inform the control station immediately through a communication network without any fail.

The model proposed in this paper can be used only in small scale industries. It has a temperature sensor, micro controller and a RF module as its key components. The system works by comparing the temperature of the surrounding area with a reference value. Whenever there occurs a variation in the temperature, the robot gives command to a 12V dc motor and it will give movements to the robot so it can immediately reach the emergency zone.

Sahil S.Shah, Vaibhav K.Shah, Prithvish Mamtora and Mohit Hapani (2015), Fire Fighting Robot[4]: The objective of this paper is to develop the model of a fire fighting robot using embedded system. This robot moves through a model structure, and whenever it detects a fire it extinguishes it with the help of a blowing technique.

The model described here is a line follower robot which moves with the help of LDRs connected to it. A comparator fetches the changes in voltages and helps in the robo movement.

It contains IR receivers for fire detection. Whenever the fire is detected it signals the 555 timer to activate the extinguishing block and thus resists the fire. After extinguishing the fire the robot will continue to move to the next direction.

III. PROPOSED SYSTEM

The proposed system is a line follower robot which comprises of two sub circuits. Microcontroller unit forms the first part. Temperature sensor, humidity sensor, toxic gas sensor, float sensor, LDR, IR sensor arrays are interfaced with microcontroller. These sensor sense respective parameters like temperature, humidity, presence of toxic gas and water level. IR arrays are used to trace out the predefined path. Depending upon the input to controller from IR arrays, controller issues appropriate signal to motor driver that drive robot within the predefined track. All the sensed physical parameters are transmitted to monitoring station by microcontroller through RF data modem.

Raspberry pi along with web cam forms the second part. Here the web cam captures the visual from surroundings, as the robot moves through predefined path. The captured image is then processed to trace out the presence of fire. Once fire is detected raspberry pi send a signal to microcontroller which in turn issue a signal to stop robot movement and also water pump is activated to cut off the fire. When fire is extinguished the robot move ahead with the same.

COMPONENT	SPECIFICATION
Microcontroller	ATMEGA328
Temperature sensor	DHT11
Humidity sensor	
Gas sensor	MQ7
Level sensor	Float type
Voltage regulator	7805
Motor driver	L293D
Power supplies	9v,12v
Water pump	12 v dc
Relay	SPDT
Buzzer	-
Capacitor	22pf,10mf,1000mf
Resistor	1K,10K,100K
Transistor	BC547
Opamp	LM358
IR sensor	-
Diode	IN4001
Raspberry pi 3	-
Web camera	-
RF data modem	2.4GHz
LDR	-
DC motor	12 v dc

Table 1: Component specification

IV. WORKING OF THE SYSTEM

The basic microcontroller unit contains a power supply unit, External Crystal oscillator and a reset circuitry. The power supply unit consist of rectifier circuit followed by a voltage regulator which is used to regulate the voltage to a fixed voltage of 5v. Normally 7805 voltage regulators are used for this purpose. Normally the crystal oscillators, provided with the microcontrollers are of 16MHz and two 22pf capacitors are used with the microcontroller as decoupling capacitors for decreasing the noise. The reset circuitry used here consist of a switch and a resistor normally a HIGH signal is present in the CLR pin of the microcontroller when the switch is pressed a LOW presents at the pin and microcontroller gets reset and as there is a resistor provided in circuit the Vcc and Ground never get direct short while resetting. The microcontroller consists of an internal ADC module this ADC module is used to convert the ADC reading from the sensor to a digital value.

Temperature sensor, humidity sensor, toxic gas sensor, level sensor, IR sensor array, relay unit, motor driver, raspberry pi etc. are interfaced with microcontroller.DHT11sensor is used to sense both temperature and humidity level. The presence of toxic gas is determined by employing a gas sensor MQ7, determines the presence of carbon dioxide. Float type level sensor is used to find the water level in the tank. LDR is used to obtain the illumination level. Sensors are provided with 5V dc power supply. The sensed physical parameter are then transmitted to the monitoring station by microcontroller through RF data modem.

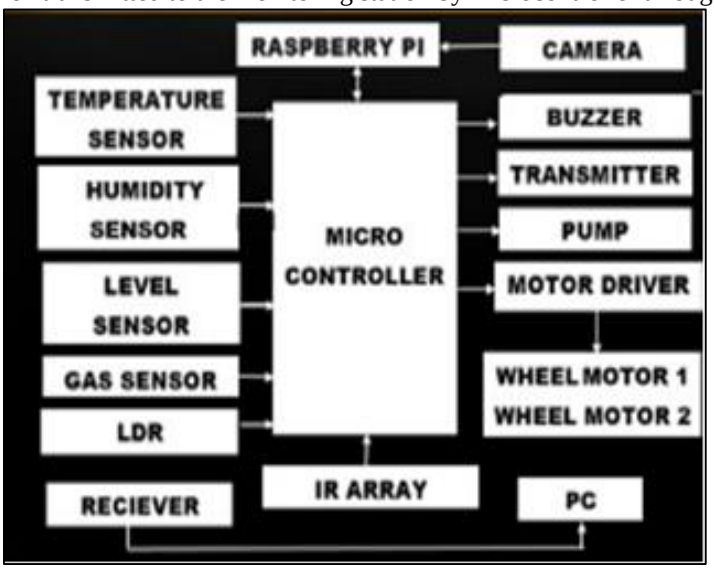

Fig. 1: Block Diagram of the proposed system

IR array consist of an IR transmitter and IR receiver. The transmitter is an IR led and receiver is an IR photodiode. When no signal is received by IR receiver the potential at the inverting terminal goes high than the other terminal of comparator, thus the output of the comparator is low else it's high. the comparator output is then fed to microcontroller .Depending upon the input controller drives the motor driver to respective direction and keep the robot along the track.L293D is used to drive two 12v dc motor simultaneously.L293D is powered up with 5v dc supply.

A web cam is attached with raspberry pi unit captures visual images. The captured image is then processed with the help of raspberry pi platform. A 5v supply is given to raspberry pi. Image processing and capturing process goes on parallel. When fire detected, raspberry pi send an alert signal to microcontroller. Microcontroller issues a control signal to stop the robot followed by activation of relay unit. When relay is activated a 12 v dc supply reaches the water pump. Thus the water pump turns on and pumps water to extinguish the fire. When the fire extinguished completely the robot move forward and continues to monitor its surroundings.

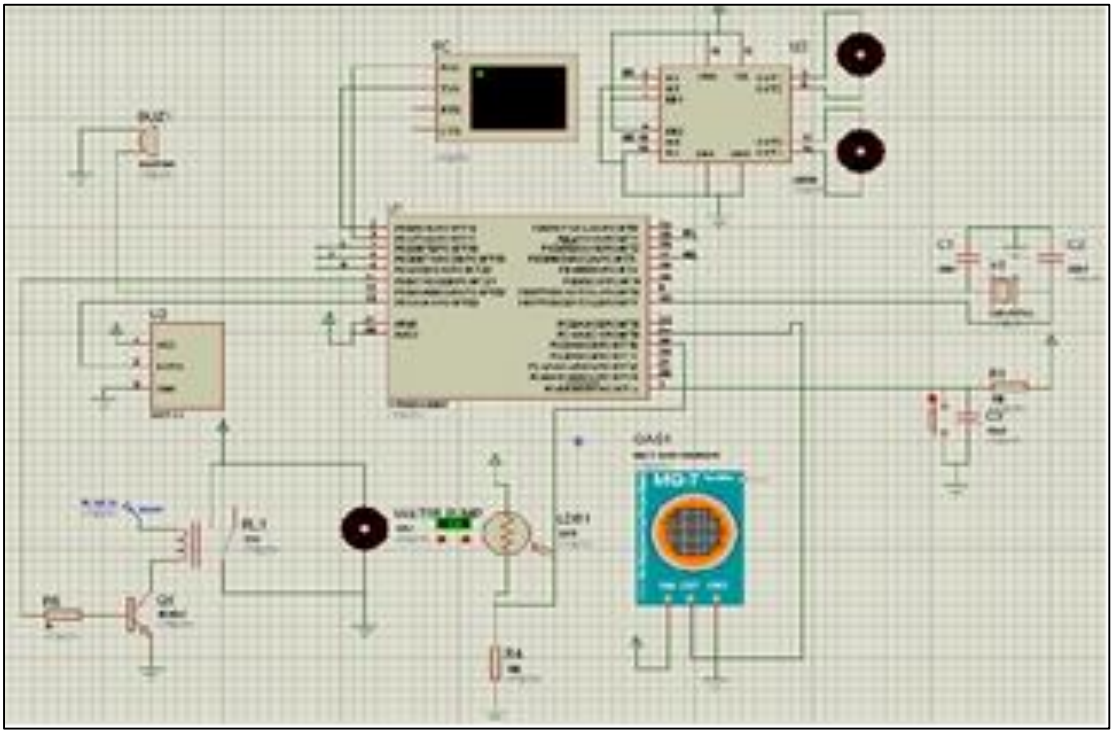

Fig. 2: Overview of the Circuit Diagram

V. RESULT

Safety being a yet important factor around, it was a tedious task to choose the field of safety in which the project has to be completed. Coal mine safety was our maiden option .Thus a model extinguish underground coal mine fire was finally developed and simulation session was completed successfully.

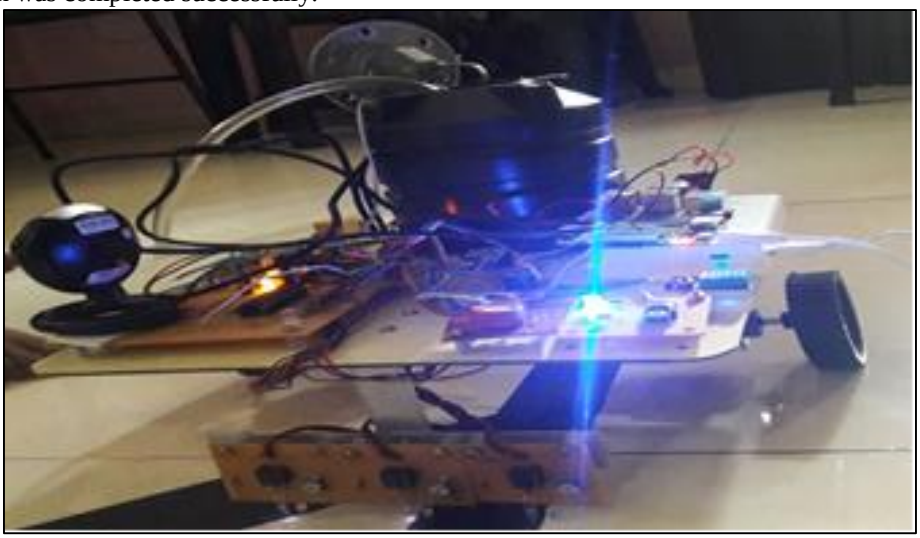

Fig. 3: EX ROB

VI. CONCLUSION

Certainly there are variations depending on whether they work in a coal mine, metal or non-metal mine, but overall the dangers are pretty much the same. Miners face a plethora of dangers working in what often amount to cramped, unsafe facilities. The threat of injury is almost constant, miners often being injured from falling objects, equipment, and roof collapse. Though the threat of physical injury is a real concern for many, this is not the only threat that miners face. Miners also run the risk of respiratory damage through the high levels of dust and other chemical particulates present in deep coal mining facilities. Another major threat miners can likely to be in is mine explosions due to the release of toxic gases evolved during coalification. So rescuing the underground trapped miners is the least understandable thing that we could do. The main intention was to provide a safe working environment for the underground coal miners because we believe that nothing is more important to the coal industry than ensuring our people return home safely at the end of the working day. The EX-ROB is capable of fighting against mine explosions which is the most disastrous as well as it'll monitor the presence of toxic gases, temperature and humidity level etc.

ACKNOWLEDGMENT

We would like to extend our esteemed gratitude towards our institution, ASIET Kalady, for the encouragement given to us for permitting us to avail of the various facilities available and special thanks to all the faculties of applied electronics and instrumentation for the valuable advice and suggestions to get a good deliverable project.

REFERENCES

[1] K. Sahulhameed, W. Newton David Raj, S. Samsudeen, K. Noorulhak & G. Sabarish Nagamani,' Artificial Eye and Sensory based an Intelligent Robot for Fire Extinguishment Task', Special Issue of International Journal on Advanced Computer Theory and Engineering (IJACTE).

[2] Puneet Sharma, Chandni Goel, Sorabh Datta and Sukhwinder Singh Dhillon,' Fully Automated Fire Fighting Robot with Radio Frequency Module', Journal of Academia and Industrial Research (JAIR)Volume 3, Issue 7 December 2014.

[3] G. Divya and B.A.Sarath Manohar Babu,' Rescue System for Coal Mine Workers using Different Sensors Based on GSM and RF-PRO', International Journal of Advanced Research in Computer Engineering & Technology (IJARCET)Volume 3 Issue 7, July 2014

[4] Sahil S.Shah1, Vaibhav K.Shah2, Prithvish Mamtora3 and Mohit Hapani4,' FIRE FIGHTING ROBOT', International Journal of Emerging Trends & Technology in Computer Science (IJETTCS) Volume 2, Issue 4, July – August 2013

[5] Chee Fai Tan, S.M. Liew, M.R. Alkahari, S.S.S. Ranjit, 1M.R. Said, W. Chen, G.W.M. Rauterberg, D. Sivakumar and Sivarao',' Fire Fighting Mobile Robot: State of the Art and Recent Development', Australian Journal of Basic and Applied Sciences, 7(10): 220-230, 2013 ISSN 1991-8178

[6] Ren C. Luo and Kuo L. Su, Member "Autonomous Fire-Detection System Using Adaptive Sensory Fusion for Intelligent Security Robot"-IEEE/ASME TRANSACTIONS ON MECHATRONICS, VOL. 12, NO. 3, JUNE 2007

[7] William Dubel, Hector Gongora, Kevin Bechtold, Daisy Diaz "An Autonomous Firefighting Robot"-IEEE SOUTHEASTCON 2003 http://dubel.org/robots/dubel_firefighter_FIU_fcrar2003.pdf

[8] Ching-Chih Tsai, Senior Member, IEEE, Hsu-Chih Huang, Member, IEEE, and Shui-Chun Lin- "FPGA- Based Parallel DNA Algorithm for Optimal Configurations of an Omni directional Mobile Service Robot Performing Fire Extinguishment" - IEEE TRANSACTIONS ON INDUSTRIAL ELECTRONICS, VOL. 58, NO. 3, MARCH 2011