Image Quality Assessment Based on Discrete Wavelet Transform

Himani Sharma
Department of Electronics and Communication Engineering
Punjabi University Patiala

Er. Bhawna Utreja
Department of Electronics and Communication Engineering
Punjabi University Patiala

Dr. Charanjit Singh
Department of Electronics and Communication Engineering
Punjabi University Patiala

Abstract

This paper scrutinize image quality assessment emanate from discrete wavelet transform. Image quality assessment endeavor to procure visual quality metric dovetail deftly with human visual cognizance. Full reference IQA technique juxtaposes a reference and distorted image and prognosticate ocular quality. This technique schleps out by discerning contrariety between empirical score with image impressionistic score through beholder rating. The intend of beholder is to rate the correlation present in test images. Discrete wavelet transform dispatch single-level one-dimensional wavelet decomposition. DWT anatomize signals and images into escalating finer octave bands. The propounded method was placed under scrutiny with public image datasets manifest highest correlation with subjective results than neoteric techniques. The posited method proffers impeccable revamping of signal consequent to conversion. The denouement promulgates prowess in locution of computational complexity, speed.

Keywords- Image Quality Assessment (IQA), Objective Quality Measure, Full Reference Metric, Discrete Wavelet Transform (DWT)

I. INTRODUCTION

Image quality assessment (IQA) set off indispensable with enduring stipulation of media in burgeon number of applications such as mobile phones, tablets, live streaming, and social networks. The greatest proliferation of media endure processing and transmission that instigate distortions and deteriorates the ascertain image quality for the nigh human onlooker.[1]

It is expedient to appraise the quality deterioration incorporated by these distortions to adjure the paradigm image processing systems and algorithms. Consequently, quality appraisal betides for innumerable applications.[1] Quality assessment stratification perpetrate in two modus operandi: Subjective and Objective. Albeit, subjective is authentic yet exorbitant and time devastating. Objective image metric superintend and assimilate the image quality. This metric epitomizes algorithms and parameter perspective of image processing systems. [2]

Full reference objective IQA automatically appraises the perceptual quality of a distorted image apropos the original high quality image. The pertinence of FR-IQA in image acquisition, watermarking, restoration and denoising, fusion etc., it has procured gigantic pervasiveness and scrutiny in the intervening period. Thence, from the last decade umpteen of antithetical techniques has instigated for FR-IQA.[3]

This paper contemplates discrete wavelet transform which dispatch dissolution of signals into sub-bands with smaller bandwidths and slower sample rate. This multi-resolution analysis empowers to detect patterns indiscernible in the raw data. The austere discretization of scale and metamorphosis in the DWT corroborate that the DWT is an orthonormal transform.[4] The posited method performance was anatomized and compared with contemporary methods namely: Peak to signal noise ratio (PSNR), Structure similarity index (SSIM), Visual signal to noise ratio (VSNR), DCT Sub-band similarity (DSS). The denouement unveils that posited method manifest superlative performance on Tampere image database. The method dispenses sporadic depiction of signal.[5]

II. PROBLEM FORMULATION

DCT transform is scissile linear transformation. Copious of image and video coding techniques procured by blocked based DCT transforms. [6]

The inordinate extensive DCT definition of a 1-D sequence of length N is:

$$Y[k] = C[k] \sum_{n=0}^{N-1} \cos \frac{(2n+1)k\pi}{2N}$$

For k= 0, 1, 2……N-1. The 2-D DCT is an explicit codicil of the 1-D case and proceeds as follows:

$$Y[j,k] = C[j]C[k]\sum_{m=0}^{N-1}\sum_{n=1}^{N-1} x[m,n]\, cos[\frac{2m+1(j\pi)}{2N}]cos[\frac{2n+1(k\pi)}{2N}]$$

Extortionate correlation between vicinal pixels engender image structure crucial for perception of image quality. The distortion in image structure appraised by cross correlation between pixels of reference and distorted image. Reckoning the local variance of a sub-band of 2-D DCT coefficients concomitant with computing the auto-correlation of an image patch in the pixel domain.[7]

$$\mathrm{DSS}_{m,n}(p,q) = \frac{2\sigma^X_{m,n}(p,q)\sigma^Y_{m,n}(p,q)+C}{\sigma^X_{m,n}(p,q)^2+\sigma^Y_{m,n}(p,q)^2+C} \qquad (1)$$

Compute the local variance $\sigma_{m,n}(p,q)^2$ for patches of size $k \times k$ in each sub-band.
Explicate$\sigma^X_{m,n}(p,q)^2$as local variance at location *(p,q)*in sub-band *(m,n)* of reference image.
Elucidate $\sigma^Y_{m,n}(p,q)^2$as local variance at location *(p,q)*in sub-band *(m,n)* of reference image.
Stipulate *C* constant for numerical stability. Typical values $100 \le C \le 1000$.
DC coefficient is commensurate to average image amplitude. It is requisite to appraise the similarity score betwixt the reference and distorted DC sub-bands as follows:

$$\mathrm{DSS}_{m,n}(p,q) = \frac{2\sigma^X_{0,0}(p,q)\sigma^Y_{0,0}(p,q)+C}{\sigma^X_{0,0}(p,q)^2+\sigma^Y_{0,0}(p,q)+C} \cdot \frac{\sigma^{XY}_{0,0}(p,q)+C}{\sigma^X_{0,0}(p,q)\sigma^Y_{0,0}(p,q)+C} \qquad (2)$$

Elucidate $\sigma^{XY}_{0,0}(p,q)$ as the cross-correlation at location *(p,q)*in the DC sub-band betwixt the reference image and distorted image.[8]
First term (1) assess the change in local variance and Second term (2) appraise local Pearson cross-correlation metric.
Percentile scoring to each sub-band separately, procuring 64 sub-band similarity scores $DSS_{m,n}, 0 \le m,n \le 7$. appraising the distortion in each sub-band the 64 similarity scores are weighted to procure a scalar score:

$$DSS = \sum_{m,n=0}^{7} w_{m,n} DSS_{m,n}$$

Elucidate $w_{m,n}$ as weight of the score of sub-band. DSS has exorbitant computational complexity and nether correlation with subjective results. For bye it blocks artifacts.
This problem can be formulated by discrete wavelet transform.DWT rejig image pixels into wavelets exploited for wavelet base compression and coding.[9]
The DWT transform pair is defined as:

$$W_\varphi(j_o,k) = \frac{1}{\sqrt{M}}\sum_x f(x)\varphi_{j_o,k}(x)$$

$$W_\psi(j,k) = \frac{1}{\sqrt{M}}\sum_k f(x)\psi_{j,k}(x)$$

Elucidate $f(x), \varphi_{j_o,k}, \psi_{j,k}$as function discrete variable $x = 0,1,2 \ldots M-1$.
Explicate$j_o = 0$,M to be a power of 2 i.e. $M = 2^J$.
Assessing the change in local variance and appraisal of local Pearson cross-correlation metric exploiting discrete wavelet sub-band similarity is accomplished.[8]
Percentile scoring to each sub-band separately, procuring 64 sub-band similarity scores $DWTSS_{m,n}, 0 \le m,n \le 7$. appraising the distortion in each subband the 64 similarity scores are weighted to procure a scalar score:

$$DWTSS = \sum_{m,n=0}^{7} w_{m,n} DWTSS_{m,n}$$

Elucidate $w_{m,n}$ as weight of the score of sub-band. DWTSS has lower computational complexity and procure on average highest correlation with the subjective results. This method has faster speed of operation.[10]

III. METHODOLOGY

An exalted diagram of the posited DWT sub-bands similarity (DWTSS) image quality assessment scheme. Introductory, channel decomposition is accomplished for both reference and distorted images by sundering each image into sub-bands commensurate to different 2D DWT spatial frequencies. After channel decomposition the similarity betwixt each sub-band in the reference image and its cognate sub-band in the distorted image is reckoned, resulting in a sub-band similarity score. Finally, sub-band similarity scores are weighted which upshot a scalar DWTSS quality score. [11][12]

AC coefficients procure corroboration of amplitude and orientation of edges within an image, the DC coefficient is proportional to the average image amplitude. Appraisal the similarity betwixt DC sub-bands in a way that it contemplate other properties in the DC sub-bands. Elucidating the distortion in each DWT sub-band, the 64 similarity scores are weighted to obtain a scalar score. [13]

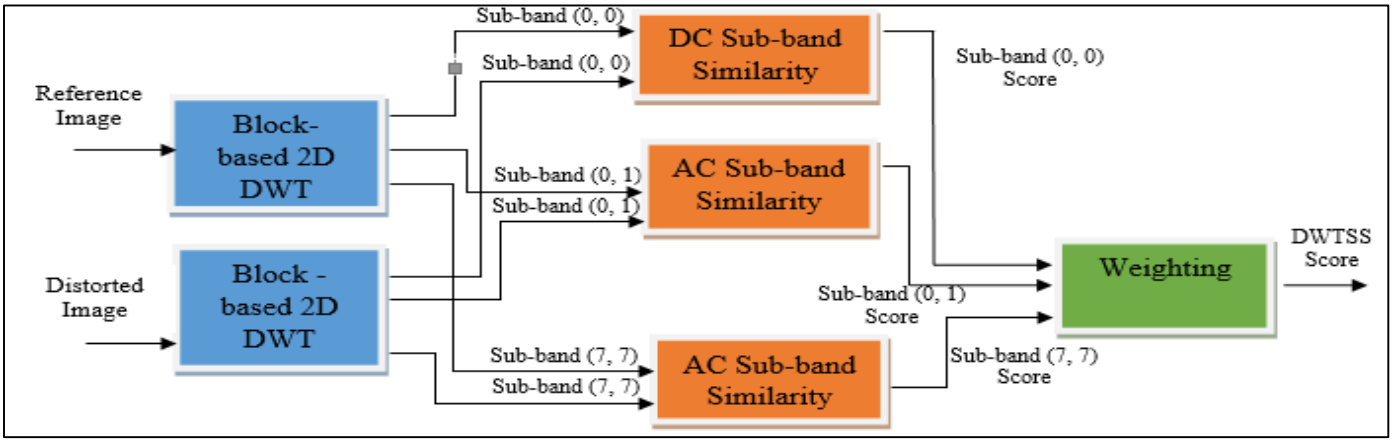

Fig. 1: DWT Sub-band Similarity image quality assessment scheme

IV. PROPOSED ALGORITHM

The decomposition is procure apropos to either a particular wavelet ('wname') or particular wavelet decomposition filters (Lo_D and Hi_D).
[cA,cD] = dwt(X,'wname') compute the approximation coefficients vector cA and detail coefficients vector cD, obtained by a wavelet decomposition of the vector X. The character vector 'wname' contains the wavelet name.
[cA,cD] = dwt(X,Lo_D,Hi_D) compute the wavelet decomposition as above, given these filters as input:
Lo_D is the decomposition low-pass filter.
Hi_D is the decomposition high-pass filter.
Lo_D and Hi_D must be the same length.
Elucidate signal s of length N, two sets of coefficients are computed: approximation coefficients cA1, and detail coefficients cD1. These vectors are procured by convolving with the low-pass filter Lo_D for approximation and with the high-pass filter Hi_D for detail, followed by dyadic decimation. [14][15]

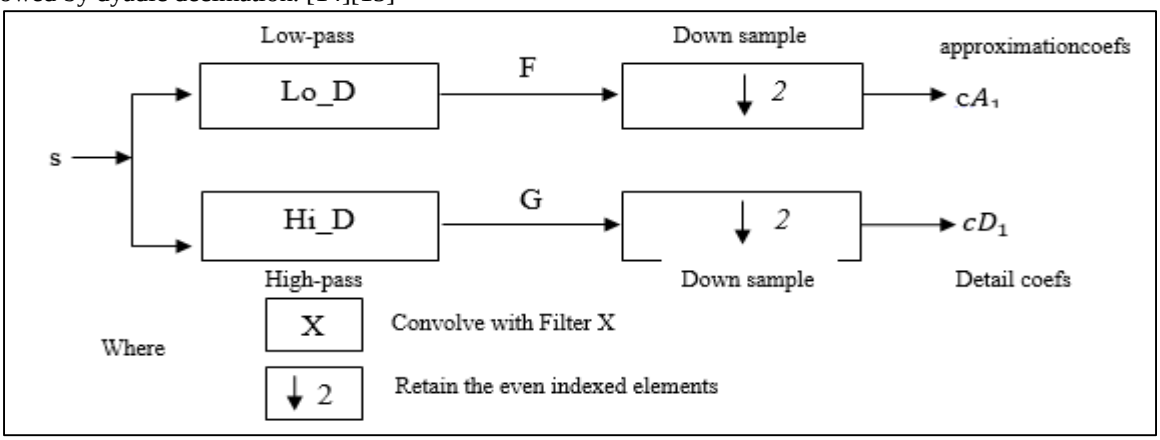

The length of each filter is equal to 2L. For signal of length N, the signals F and G are of length N + 2L − 1, and then the coefficients CA1 and CD1 are of length.

$$[\frac{N-1}{2}+L]$$

To pursue with signal-end effects intricate by a convolution-based algorithm, a global variable superintend by dwt mode is manipulated. These variables elucidate kind of signal extension mode used. [16]

V. EXPERIMENTS AND RESULTS

To Appraisal the performance of posited IQA scheme reckon it against the subjective results on public image dataset - Tampere image database. TID earmarked for the appraisal full reference visual quality assessment metrics.TID empower to reckon a given metric analogous to mean human perception. The database embody inordinate number(3000) of test images procured from 25 reference images and 1700 of distorted images (25 reference images x 17 types of distortions x 4 levels of distortions).All images are saved in bitmap format without compression.[17]

Scrutinize three types of correlation betwixt the subjective results and quality indices to appraise the relative performance between the posited method and avant-garde full reference image quality assessment technique. The Pearson linear correlation coefficient (LCC) is expounded as follows: [18]

$$\boldsymbol{r} = \frac{\sum \boldsymbol{d_x d_y} - \sum \boldsymbol{d_x} \times \sum \boldsymbol{d_y}}{\sqrt{\sum \boldsymbol{d_x}^2 - \frac{(\sum \boldsymbol{d_x})^2}{\boldsymbol{N}}} \times \sqrt{\sum \boldsymbol{d_y}^2 - \frac{(\sum \boldsymbol{d_y})^2}{\boldsymbol{N}}}}$$

Where: d_x = Deviation of X series from assumed mean
d_y = Deviation of Y series from assumed mean
$\sum d_x d_y$ = Sum of multiples of $d_x d_y$
$\sum d_x^2$ = Sum of squares of d_x
$\sum d_y^2$ = Sum of squares of d_y
$\sum d_x$ = Sum of deviation of X series
$\sum d_y$ = Sum of deviation of Y series
N= Total number of observations

The Pearson linear correlation coefficient (LCC) succour as appraisal for linearity and homoscedasticity. LCC is advantageous statistical formula that measures the strength betwixt variables and relationships.[19]

The Spearman rank-order correlation coefficient (SROCC) is non - parametric test exploited to discern the degree of association betwixt two variables. SROCC is elucidated as follows:

$$r_s = \frac{\sum d_i^2}{n(n^2 - 1)}$$

Where: r_s= coefficient of rank correlation
d_i= difference in rank between paired values of X and Y
n = sample size

While reckoning SROCC it is necessitate to calculate rank and compare two data sets. SROCC identify whether two variables relate in a monotonic function. SROCC assess monotonicity. [20]

The Kendall correlation (KC) broached as Kendall's tau coefficient is non-parametric test to appraise the ordinal association betwixt two measured quantities. The kendall correlation coefficient is elucidated as follows:

$$\tau = \frac{N_c - N_d}{\frac{1}{2}n(n-1)}$$

Where: N_c = Number of concordant
N_d = Number of discordant
KC proclaims that whether two variables are statically dependent. KC reckon dependency.[7]

The exploitation of enumerated correlation appraise for five Full reference IQA metrics: Peak signal to noise ratio (PSNR), Structural similarity index (SSIM), Visual signal to noise(VSNR),DCT sub-band similarity(DSS) and posited method discrete wavelet transform(DWTSS).The posited method used Daubechies wavelet filter(db10). Daubechies wavelet filter is a family of orthogonal wavelets denotation for discrete wavelet transform signalized by a burgeon number of dissipated moments. Daubechies orthogonal wavelets db1 and db10 cardinally exploited. The index number cited as the number N of coefficients. Each wavelet has a number of zero moments or vanishing moments equal to half the number of coefficients. [20]

	PEAK SIGNAL TO NOISE RATIO (PSNR)	*VISUAL SIGNAL TO NOISE RATIO (VSNR)*	*STRUCTURAL SIMILARITY INDEX (SSIM)*	*DCT SUBBAND SIMILARITY (DSS)*	*DWT SUBBAND SIMILARITY (DWTSS)*
PEARSON LINEAR CORRELATION COEFFICIENT(LCC)				*0.8253*	*0.8272*
SPEARMAN RANK ORDER CORRELATION COEFFICIENT(SROCC)	*0.496*	*0.464*	*0.508*	*0.6203*	*0.6433*
KENDALL CORRELATION(KC)	*0.687*	*0.637*	*0.681*	*0.7753*	*0.7922*

Comparison of Full reference IQA techniques with DWTSS procured by Daubechies wavelet filter (db10) and function "Ceil".
Vanishing moment restrain the wavelets prowess to encompass polynomial behaviour or information in a signal
The propounded method exploited function "Ceil" swap of function "floor". Ceil round off matrix elements towards positive infinity. It is cited as X = ceil(Y).

VI. DESCRIPTION

X = ceil(Y) rounds each element of Y to the nearest integer greater than or equal to that element.
X = ceil(a) rounds each element of array a to the nearest number of seconds greater than or equal to that element.
X = ceil(a, unit) rounds each element of a to the nearest number of the specified unit of time greater than or equal to that element.
For bye the posited method exploits image size of 2× 2 (no of rows × no of coloumns) and 4×4 alternative to 8×8 block size. The denouement promulgates the up gradation of speed. Expeditiously, the results divulge that proposed method is superlative.

	PSNR	*VSNR*	*SSIM*	*DSS*	*DWTSS*
LCC				*0.8253*	*0.8356*
SROCC	*0.496*	*0.464*	*0.508*	*0.6203*	*0.6377*
KC	*0.687*	*0.637*	*0.681*	*0.7753*	*0.7912*

Comparison of Full reference IQA techniques with DWTSS procured by Daubechies wavelet filter(db10) and crop image size to closest multiplication of 4.

	PSNR	*VSNR*	*SSIM*	*DSS*	*DWTSS*
LCC				*0.8253*	*0.8323*
SROCC	*0.496*	*0.464*	*0.508*	*0.6203*	*0.6385*
KC	*0.687*	*0.637*	*0.681*	*0.7753*	*0.7920*

Comparison Full reference IQA techniques with DWTSS procured by Daubechies wavelet filter(db10) and crop image size to closest multiplication of 2.
The denouement on this database and appraisal of criterion, the posited DWTSS metric yields on average highest correlation with all other image quality assessment metrics. It has lower computational complexity.[1]

VII. CONCLUSION

This paper propound full reference image quality assessment emanate from discrete wavelet transform which reckon change in structural information in sub-bands in discrete wavelet transform domain and weighting the quality estimates for these sub-band scores. The posited method procures on average highest correlation. This method has lower computational complexity and faster speed of operation competing with avant-garde techniques.[1]

REFERENCES

[1] A. Balanov, A. Schwartz, Y. Moshe and N. Peleg, "Image quality assessment based on DCT subband similarity," in Image Processing (ICIP), 2015 IEEE International Conference on, 2015.
[2] S. Chikkerur, V. Sundaram, M. Reisslein and L. J. Karam, "Objective video quality assessment methods: A classification, review, and performance comparison," IEEE transactions on broadcasting, vol. 57, pp. 165-182, 2011.
[3] E. C. Larson and D. M. Chandler, "Most apparent distortion: full-reference image quality assessment and the role of strategy," Journal of Electronic Imaging, vol. 19, pp. 11006-11006, 2010.
[4] Z. Wang and E. P. Simoncelli, "Translation insensitive image similarity in complex wavelet domain," in Acoustics, Speech, and Signal Processing, 2005. Proceedings.(ICASSP'05). IEEE International Conference on, 2005.
[5] S. Winkler and P. Mohandas, "The evolution of video quality measurement: From PSNR to hybrid metrics," IEEE Transactions on Broadcasting, vol. 54, pp. 660-668, 2008.
[6] E. Y. Lam and J. W. Goodman, "A mathematical analysis of the DCT coefficient distributions for images," IEEE Transactions on image processing, vol. 9, pp. 1661-1666, 2000.
[7] S. Winkler, "Analysis of public image and video databases for quality assessment," IEEE Journal of Selected Topics in Signal Processing, vol. 6, pp. 616-625, 2012.
[8] H.-C. Lin, L.-L. Wang and S.-N. Yang, "Extracting periodicity of a regular texture based on autocorrelation functions," Pattern recognition letters, vol. 18, pp. 433-443, 1997.
[9] D. M. Chandler and S. S. Hemami, "VSNR: A wavelet-based visual signal-to-noise ratio for natural images," IEEE transactions on image processing, vol. 16, pp. 2284-2298, 2007.
[10] Z. Wang, A. C. Bovik, H. R. Sheikh and E. P. Simoncelli, "Image quality assessment: from error visibility to structural similarity," IEEE transactions on image processing, vol. 13, pp. 600-612, 2004.
[11] W. Lin and C.-C. J. Kuo, "Perceptual visual quality metrics: A survey," Journal of Visual Communication and Image Representation, vol. 22, pp. 297-312, 2011.
[12] K. Seshadrinathan and A. C. Bovik, "Unifying analysis of full reference image quality assessment," in Image Processing, 2008. ICIP 2008. 15th IEEE International Conference on, 2008.
[13] H. R. Sheikh and A. C. Bovik, "Image information and visual quality," IEEE Transactions on image processing, vol. 15, pp. 430-444, 2006.
[14] H. R. Sheikh, M. F. Sabir and A. C. Bovik, "A statistical evaluation of recent full reference image quality assessment algorithms," IEEE Transactions on image processing, vol. 15, pp. 3440-3451, 2006.
[15] H. R. Sheikh, "LIVE image quality assessment database," http://live. ece. utexas. Edu/research/quality, 2003.
[16] M. A. Saad, A. C. Bovik and C. Charrier, "Blind image quality assessment: A natural scene statistics approach in the DCT domain," IEEE Transactions on Image Processing, vol. 21, pp. 3339-3352, 2012.
[17] N. Ponomarenko, V. Lukin, A. Zelensky, K. Egiazarian, M. Carli and F. Battisti, "TID2008-a database for evaluation of full-reference visual quality assessment metrics," Advances of Modern Radioelectronics, vol. 10, pp. 30-45, 2009.
[18] A. K. Moorthy and A. C. Bovik, "Visual importance pooling for image quality assessment," IEEE journal of selected topics in signal processing, vol. 3, pp. 193-201, 2009.
[19] S. S. Channappayya, A. C. Bovik and H. a. R. W. Jr, "Rate bounds on SSIM index of quantized images," IEEE Transactions on Image Processing, vol. 17, pp. 1624-1639, 2008.

[20] Z. Wang, E. P. Simoncelli and A. C. Bovik, "Multiscale structural similarity for image quality assessment," in Signals, Systems and Computers, 2004. Conference Record of the Thirty-Seventh Asilomar Conference on, 2003.
[21] Z. Wang and A. C. Bovik, "Mean squared error: Love it or leave it? A new look at signal fidelity measures," IEEE signal processing magazine, vol. 26, pp. 98-117, 2009.
[22] L. Zhang, L. Zhang, X. Mou and D. Zhang, "FSIM: A feature similarity index for image quality assessment," IEEE transactions on Image Processing, vol. 20, pp. 2378-2386, 2011.
[23] A. B. Watson, J. Hu and J. F. McGowan, "Digital video quality metric based on human vision," Journal of Electronic imaging, vol. 10, pp. 20-29, 2001.