Design and Fabrication of Single Phase to Three Phase Variable Voltage Power Converter

Sanmesh S Khandolkar
M.E Student
Department of Electrical and Electronics Engineering
Goa College of Engineering, Farmagudi, Ponda, Goa

Noah Dias
Assistant Professor
Department of Electrical and Electronics Engineering
Goa College of Engineering, Farmagudi Ponda, Goa

Abstract

A single-phase to three-phase power conversion system with parallel rectifier and series inverter to cope with single-phase to three-phase asymmetry is presented in this paper. This converter guarantees reduction in the input current drawn by rectifier circuit and reduction of the output voltage given by the inverter circuit. In spite of this topology it is not observed on the technical literature, in this paper at the proposed converter with modulation strategy, and comparison with the conventional configuration is studied .It gives Simulated and experimental results of the designed converter.

Keywords- Phase Converter, Variable Voltage, Single Phase, Three Phase

I. INTRODUCTION

In earlier days single-phase to three-phase conversion were made possible by with passive elements in connection with autotransformer converters [1]–[3]. These system presents well-known disadvantages and limitations [3]. Power electronics in those days with silicon power diodes and thyristors was just in developing phase. As represented in [4], power electronics were gas tube and glass-bulb electronics, were known as industrial electronics, and the silicon-controlled rectifiers came in the market in early 1960s.The solid state power electronics, semiconductor devices were the major technology installed in the power processors [5]. The semiconductor devices in the former controlled rectifiers [6] and comparing them with the new technologies [7], it is possible to figure out the development. Improvement related to power switches, was identified in terms of the circuit topology inventions in the field of three-phase to three-phase, single-phase to single-phase, and three-phase to single-phase conversion systems [8].Today three phase supply is essential for many industrial applications and hence it is increasing day by day. Three phase supply is used in industrial, domestic, commercial and in many other fields.

In rural areas, the transmission of three phase supply is costly and due to high cost of distribution equipment's only single phase supply is available to people. This single phase supply which is available needs to be converted into three phase supply for the agriculture purpose, for small shops, industries which requires three phase supply for running three phase loads.

So keeping this into mind a single phase to three phase converter is designed to run most of the three phase loads used in agriculture and small scale industries in rural areas. Without using SP-TP converter, when one of the three phase supply system fails there is a need to go for single phase to three phase conversion. Conversion can be carried out using capacitor splitting method. The capacitor is connected between one of the working phases and the failed phase. It gives a 90 degree phase shift between the two phases. The torque obtained is not so uniform. The motor runs at 70 degree of its rated capacity. Hence the above method is not considered and so static method of single phase to three phase conversion is used.

Also the conversion of single phase to three phase is carried out by rotary converters wherein the transformer is used along with the three phase motor set. The size of the converter is large, also it is not portable as it is heavy, also there are losses due to transformer, also it is costly, etc. Hence a compact, portable, and cost effective method of conversion is required. This is achieved from this project.

Electric power is generated, distributed and used as sinusoidal voltages and currents in a great variety of commercial and domestic applications.

Furthermore, in the industrial world a vast number of small, medium, or large sizes as power generators and loads are interlinked. Therefore, the design, operation, maintenance, and management of such systems very much depend on a good understanding of a circuit theory.

A phase converter is a device that converts electric power provided as phase to multiple phase or vice versa. The majority of phase converters are used to produce three-phase electric power from a single-phase source, thus allowing the operation of three-phase equipment at a site that only has single-phase electrical service. Phase converters are used where three-phase service is not available from the utility, or is too costly to install due to a remote location. A utility will generally charge a higher fee for a three-phase service because of the extra equipment for transformers and metering and the extra transmission wire.

II. PROPOSED SYSTEM

A. Topology

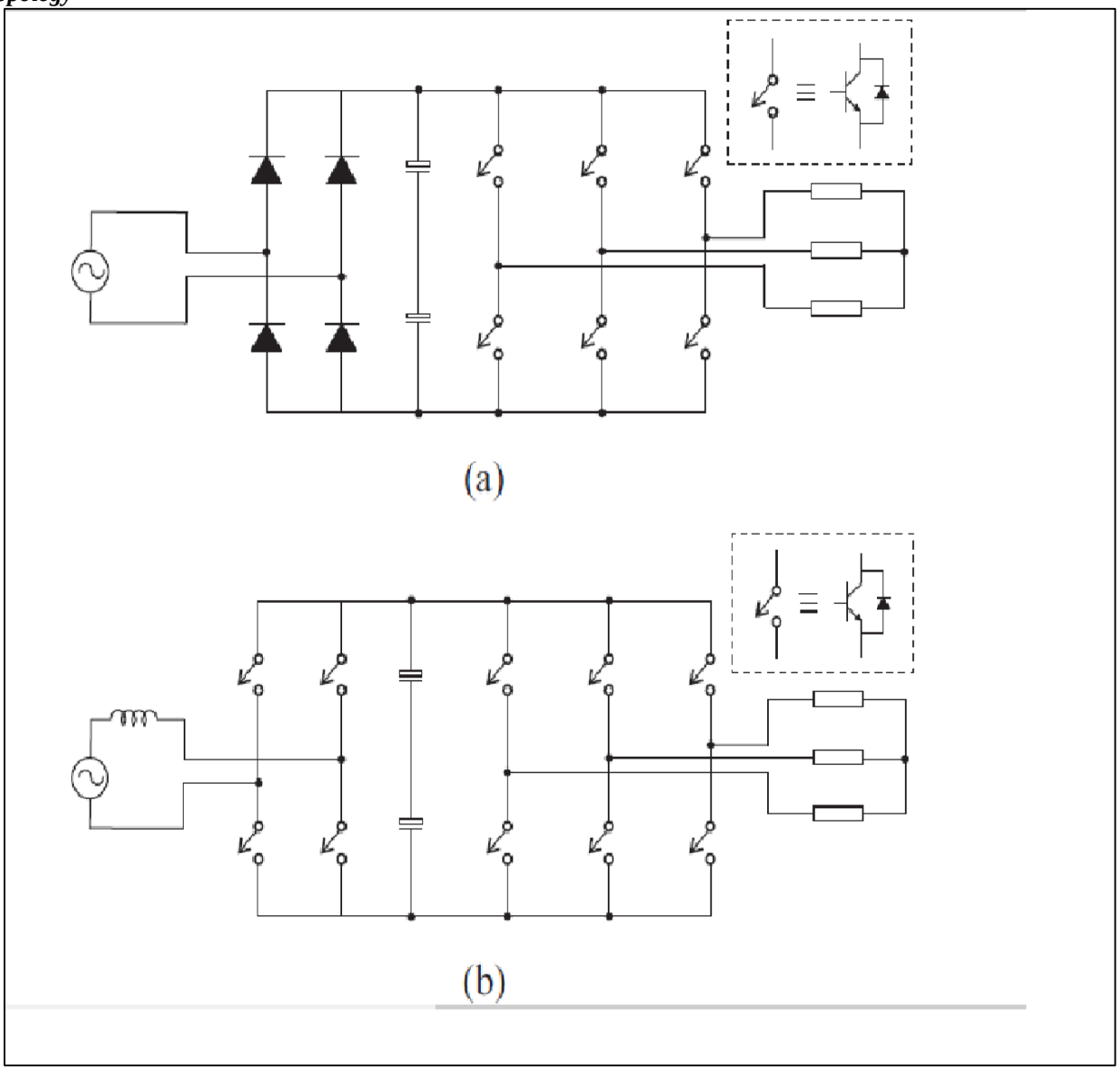

Fig. 1: Circuit Diagram of Proposed Model

The above two model were proposed for Single Phase to Three Phase Conversion.i.e. Figure 1 (a) & Figure 1 (b).

In the power distribution systems, the single-phase grid has been considered as an alternative for rural or remote areas, due to its lower cost feature, especially when compared with the three-phase solution. In huge undeveloped countries the single-phase grid is quite common due to the large area to be covered. On the other hand, loads connected in a three-phase arrangement presents some advantages when compared to single-phase loads. This is especially true in three-phase motor systems with variable-speed drives due to their constant torque characteristics.

In this scenario, there is a need for single-phase to three-phase power conversion systems. The direct solutions for the single-phase to three-phase power converters are presented in Fig. (a)& Fig (b).

In Figure (b) single-phase to three-phase power conversion, all variables (e.g., input power factor and dc-link voltage) at input–output converter sides can be controlled.

On the other hand, the configuration presented in Fig. (a) Represents a cheaper solution but without any control of the input current and dc-link voltage, as observed in Fig. (a).

A single-phase to three-phase power conversion has inherent asymmetry, i.e., constant power at the output-converter side (three-phase load) and pulsating power at the input-converter side (single-phase grid).

The direct consequence of this asymmetry is the low frequency voltage oscillation observed in the dc-link capacitors, as well as the power switches of the rectifier and inverter operate with different voltage and current ratings.

This project focuses on the study design and implementation of a complete prototype of a low powered, portable and cost effective single phase to three phase converter. The objective of this project is to supply three phase resistive/inductive load from a single phase AC mains.

The designed system consists of an AC-DC converter i.e. an uncontrolled bridge rectifier, DC-AC converter i.e. three phase inverter made up of three half-bridge inverter arms and finally the test load i.e. three phase resistive load/ 1 HP three phase motor .

High frequency pulse width modulated (PWM) pulses are generated by a microcontroller and provided to the switches of three phase inverter. The output of three phase inverter is 415V, 50Hz PWM sine wave which is later conditioned to a pure sine wave by a filter. Finally the output is connected to the test load.

III. MATLAB/SIMULINK MODEL

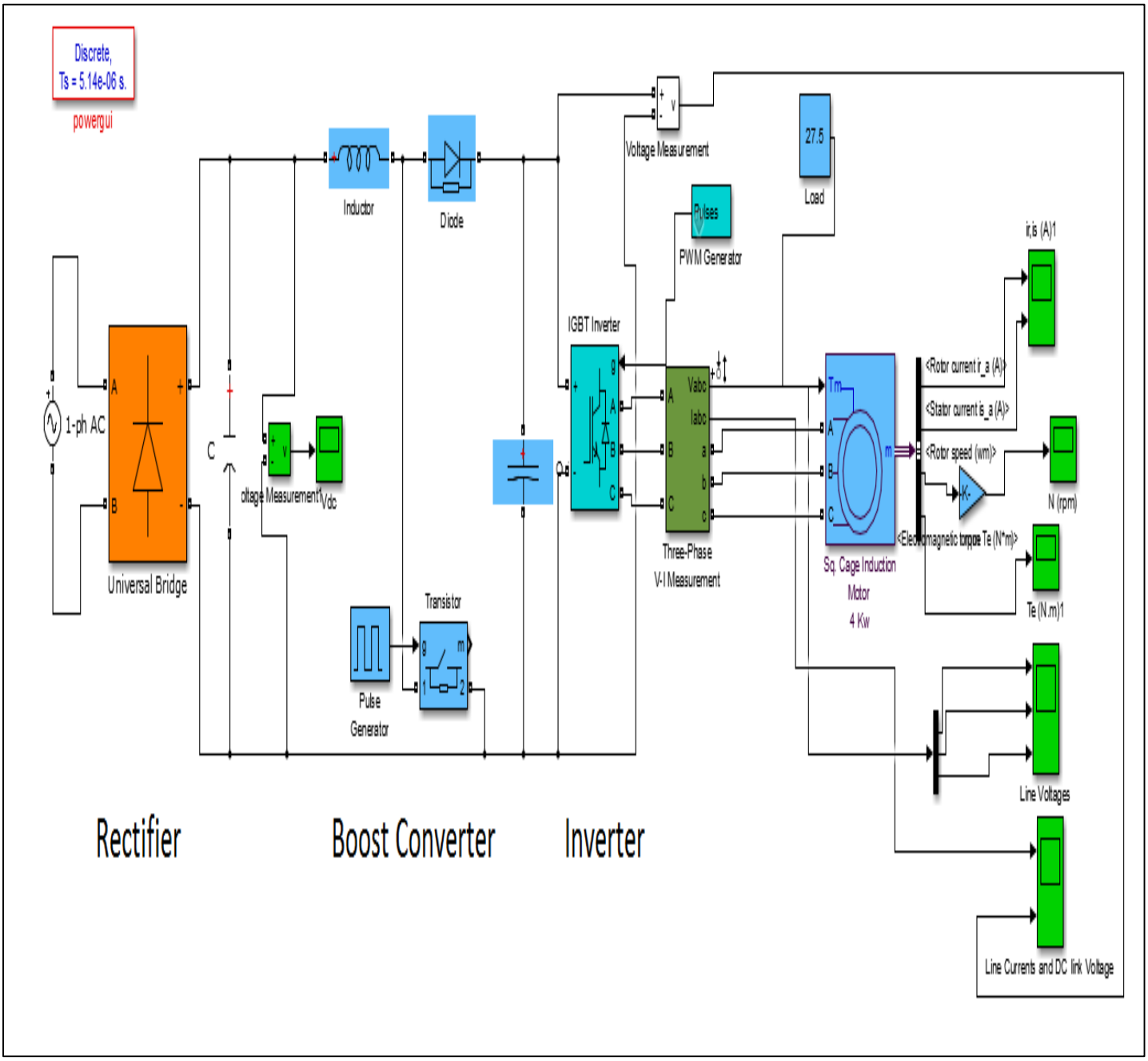

Fig. 2: Simulink Model of Single Phase to Three Phase Converter

A. Simulink Results

1) DC Link Voltage and Line Current

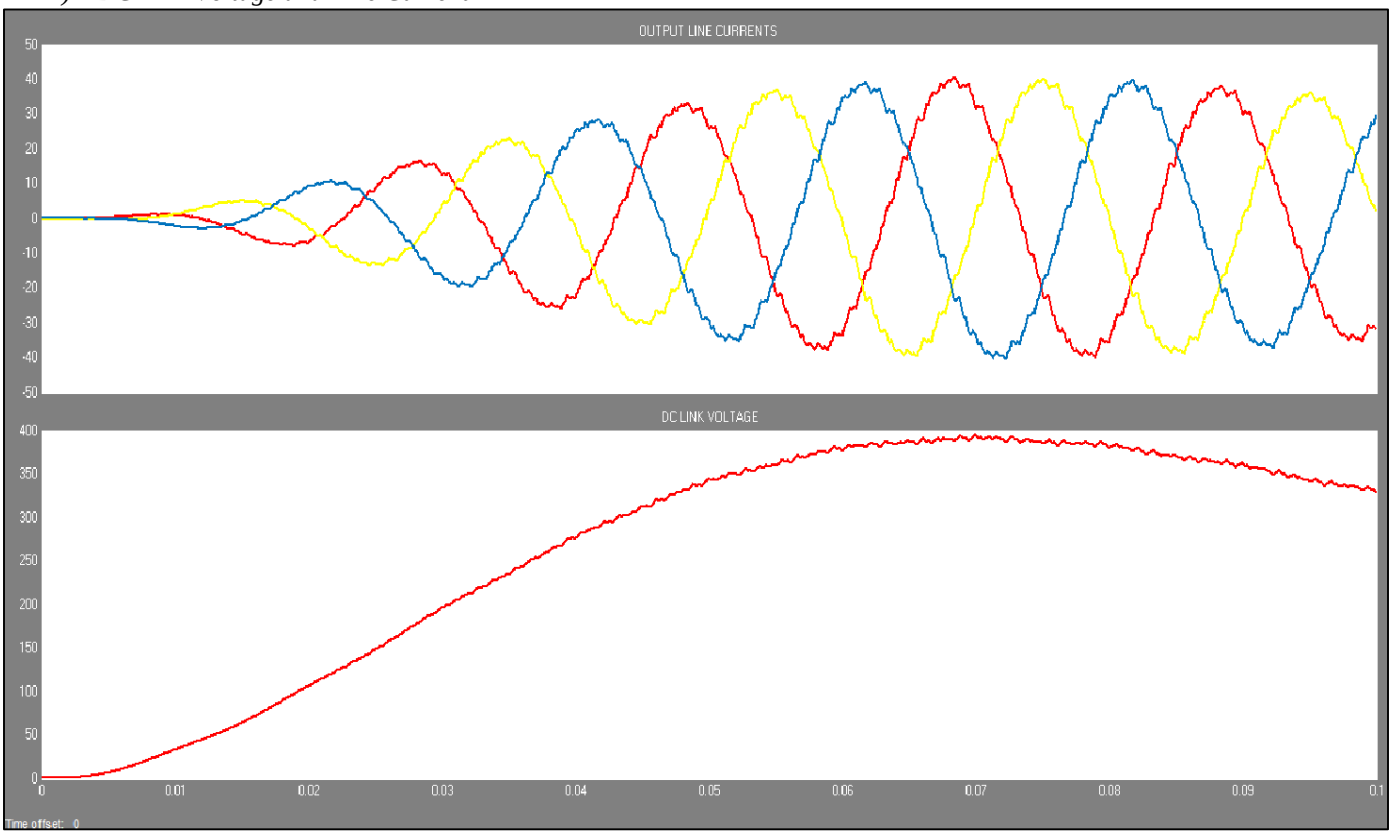

Fig. 3: DC Link Voltage & Output Currents

2) Three Phase Output Line Voltage

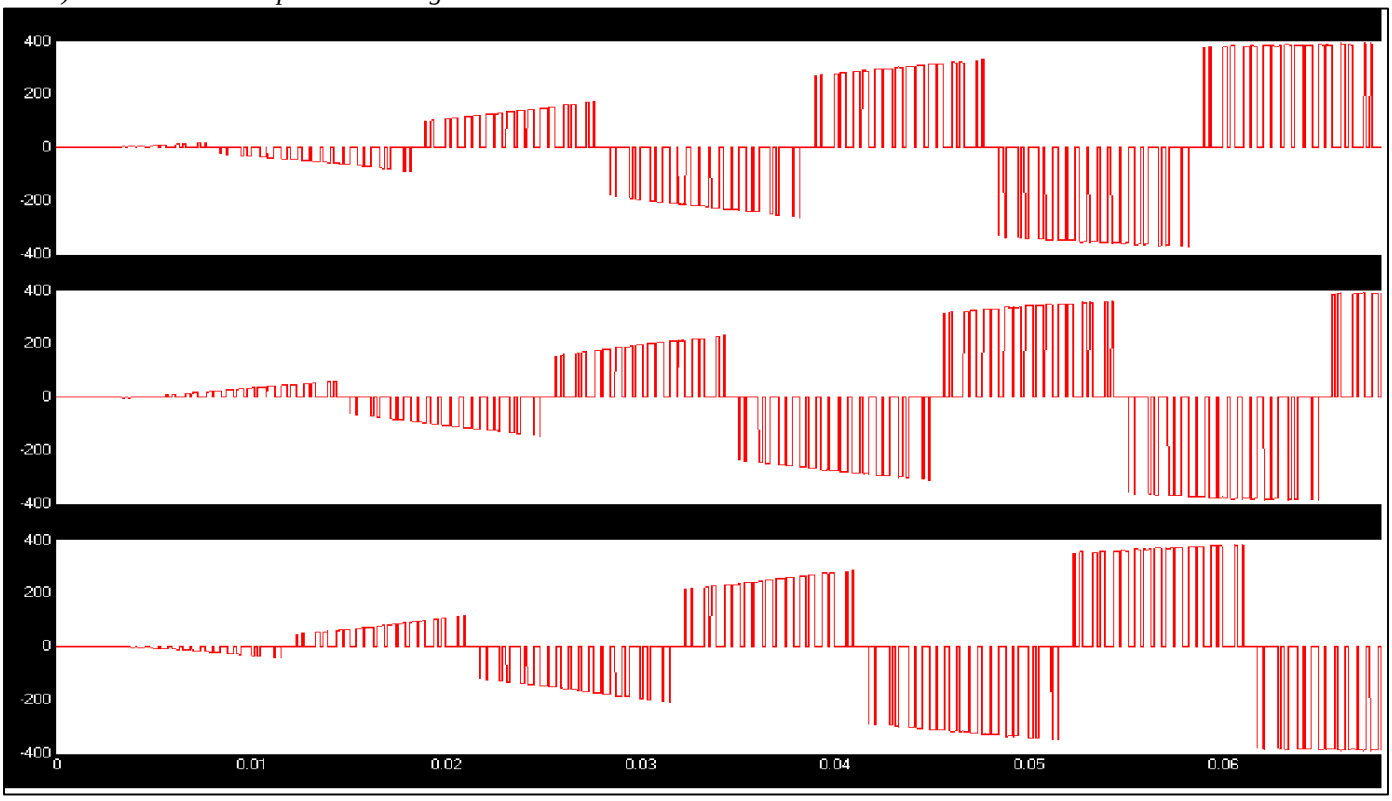

Fig. 4: Output Line Voltage

IV. DESIGN CALCULATIONS

A. Design for 5kW load

Design:
SP-TP converter for three phase load of 5kW. The design for selection of load is given as follows:
For 5000 watts star connected load:
Line -Line voltage as 415V
P = 5000W

1) Phase Voltage (V_{Ph})

$V_{Ph} = \frac{VL-L}{\sqrt{3}}$

$V_{Ph} = \frac{415}{\sqrt{3}}$

$V_{Ph} = 235V$

2) Power per Phase (P_1)

$P_1 = \frac{P}{3}$

$P_1 = \frac{5000}{3}$

$P_1 = 1666.66W$

3) Phase Current (I_{Ph})

$I_{Ph} = \frac{P1}{Vph} = \frac{1666.66}{235} = 12A$

4) Load Resistance per Phase (R_L)

$R_L = \frac{VPh}{Iph}$

$R_L = \frac{235}{12}$

$R_L = 20\Omega$

B. Design of Rectifier

The design for selection of bridge rectifier (AC to DC Converter) with capacitor filter is given as follows:
Design:
For 5000 watts star connected load
Per Phase Resistance $R_{ph} = 20\Omega$
DC Voltage Required $V_{dc} = 200v$

1) Equivalent Resistance R_{eq} (Ω)

$R_{eq} = \frac{R1 \,.\, R2}{R1+R2} + R3$

$R_{eq} = \frac{20*20}{20+20} + 244$

$R_{eq} = 30\Omega$

2) Load Current (I_{dc})

$I_{dc} = \frac{Vdc}{Rl}$

$I_{dc} = \frac{200}{20}$

$I_{dc} = 10A$

3) Capacitance@ r=10% (μF)

$C = \frac{1}{4.\sqrt{3}.f.Rl.r}$

$C = \frac{1}{4.\sqrt{3} \,.\, 50 \,.\, 20 \,.\, 0.1}$

$C = 1000\mu F$

4) Ripple Percentage @ 470μF (%)

$r = \frac{1}{4.\sqrt{3}.f.Rl.C}$

$$r = \frac{1}{4.\sqrt{3}.\ 50.\ 366.\ 1000.\ 10^{-6}}$$

r = 8.67%

5) Peak Voltage V_m (V)

$$V_m = V_{dc} + I_{dc}\left[\frac{1}{4.f.C}\right]$$

$$V_m = 200 + 10\left[\frac{1}{4.50.\ 1000.\ 10^{-6}}\right]$$

V_m= 250V

6) Voltage Rating of Diode PIV (V)

PIV = Vm

PIV = 250V

C. Design of Boost Converter

Input voltage = Vin =200V dc

Output voltage = Vo =415 V ac

Vo/Vin = [1/(1-D)]

415/200=[1/(1-D)]

D = 55%

L =[Vin*(Vout - Vin)] = 100mH

Delta IL *Fs *Vo

C =[Iout * D]=1000uF

[Fs * delta Vo]

D. Design of Three Phase Inverter

Input Voltage = V dc = 400 V dc

Output Voltage = V ac = 415 V ac

Amplitude Modulation = ma = [(1.414*415)/(3*200)] = 0.96

Frequency Modulation = mf = [Switching frequency/Grid frequency]

= 5000/50 = 100

V. CONCLUSION

It is seen that single phase to three phase converter was designed in SIMULINK For 5kW load and 4 kW Squirrel Cage Induction Motor was connected as load. Output voltage of Three Phase Inverter is 415V (AC), 50Hz .3-Phase. DC Link Voltage simulation result is 400V DC.

In this paper was proposed a single-phase to three-phase power conversion system with parallel rectifier and series inverter to cope with single-phase to three-phase asymmetry. Such converter guarantees both reduction in the input current processed by the rectifier circuit (due to the parallel connection) and reduction of the output voltage processed by each inverter (due to the series connection). In spite of proposing a topology with features not yet observed in the technical literature, this paper presented a comprehensive model of the proposed converter, modulation strategy, and a general comparison with the conventional configuration.

REFERENCES

[1] EuzeliCipriano dos Santos Jr., NadyRocha,andCursinoBrand˜aoJacobina , "Suitable Single-Phase to Three-Phase AC–DC–AC Power Conversion System '', IEEE TRANSACTIONS ON POWER ELECTRONICS, VOL. 30, NO. 2, FEBRUARY 2015

[2] ArvindK.Yadav, NayanWadgure, PavanKamdiDepartment of Electrical Engineering ,D.M.I.E.T.R (wardha) ," CONVERSION OF SINGLE PHASE TO THREE PHASE SUPPLY" , International Journal of Research in Advent Technology (E-ISSN: 2321-9637) Special Issue 1st International Conference on Advent Trends in Engineering, Science and Technology"ICATEST 2015", 08 March 2015.

[3] PoojaSahastrabuddhe, Dr. Hari Kumar Naidu ,TulasiramjiGaikwad-PatilTulasiramjiGaikwad-Patil College of Engineering & Technology, Nagpur, ''PHASE TO THREE PHASE POWER CONVERSION USING PWM TECHNIQUE'' , INTERNATIONAL JOURNAL OF ENGINEERING SCIENCES & RESEARCH TECHNOLOGY , July 2016.

[4] Dong-Choon Lee Member, IEEE , Young-Sin Kim , '' Control of Single-Phase to Three-Phase AC/DC/AC PWM Converters for Induction Motor Drives '', IEEE TRANSACTIONS ON POWER ELECTRONICS, VOL. 21, NO. 2, 1998.

[5] Ismail Daut, Rosnazri Ali and SoibTaib School of Electrical Systems Engineering, Kolej University ,Malaysia ,''Design of a Single-Phase Rectifier with Improved Power Factor and Low THD using Boost Converter Technique', American Journal of Applied Sciences 3 (9) , 2006.

[6] AprajitaRana ,HimanshuBansal , Ketan Main Delhi Technological University, Main Bawana Road, New Delhi ,''Simulation and Analysis of 3 Phase Multi-Level Inverter '', International Journal of Computer Applications (0975 – 8887) Volume 141 – No.9, May 2016 .

[7] ShaikBarakathullaBasha, Mohammad Haseeb Khan and Mohammed Ismail ''A SIMULATION MODEL FOR CONVERTING SINGLE-PHASE TO THREE-PHASE SYSTEM USING TWO PARALLEL SINGLE-PHASE RECTIFIERS''International Journal Of Electrical And Electronics Engineering And Telecommunications ISSN 2319 – 2518 , Vol. 4, No. 3, July 2015.

[8] G. Sudhir Kumar, G. Kumaraswamy, Dr. K. Sri Gowri, ''Modeling Of Single-Phase To Three-Phase Drive System Using Two Parallel Converters On Input Side'', International Journal of Engineering Research and Applications (IJERA) ISSN: 2248-9622 www.ijera.com Vol. 3, Issue 4, Jul-Aug 2013, pp.1821-1827
[9] Ahmad Saudi Samosir, Taufiq, Abdul JaafarShafie, Abdul HalimMohdYatim,''Simulation and Implementation of Interleaved Boost DC-DC Converter for Fuel Cell Application'', International Journal of Power Electronics and Drive System (IJPEDS) Vol.1, No.2, December 2011, pp. 168~174, ISSN: 2088-8694
[10] M.S.Aspalli, Asha.R, P.V. Hunagund, ''THREE PHASE INDUCTION MOTOR DRIVE USING IgbtsAND CONSTANT V/F METHOD,ISSN: 2278 – 8875, International Journal of Advanced Research in Electrical, Electronics and Instrumentation Engineering, Vol. 1, Issue 5, November 2012
[11] Chuanyun Wang, ''Interleaved Boost Converters And Applications, Chuanyun Wang Dissertation'' submitted to the Faculty of the Virginia Polytechnic Institute and State University in partial fulfillment of the requirements for the degree of Doctor of Philosophy in Electrical Engineering.
[12] A. H. Maggs, "Single-phase to three-phase conversion by the ferrarisarno system," Electr. Eng.—Part I, General, J. Inst., vol. 93, no. 32, pp. 133–136, Aug. 1946
[13] K. Hisano, H. Kobayashi, and T. Kobayashi, "A new type single-phase to three-phase converter," IEEE Trans. Magn., vol. 2, no. 3, pp. 643–647, Sep. 1966.
[14] S. Dewan and M. Showleh, "A novel static single-to three-phase converter," IEEE Trans. Magn., vol. 17, no. 6, pp. 3287–3289, Nov. 1981.
[15] M. Liserre, "Dr. Bimal K. Bose: A reference for generations [editor's column]," IEEE Ind. Electron. Mag., vol. 3, no. 2, pp. 2–5, Jun. 2009.
[16] ''Fundamentals of Electronics Circuit Design'' by Prof G. A .Kulkarni & Prof V.P. Joshi, Chapter 1 Page (1-16).
[17] ''Design Of Electronic Circuits And Computer Aided Design'', by M.M. Shah, Chapter 1 Page (3-11), Chapter 3 (190-196).
[18] R.S. Ananda Murthy, V.Nattarasu, second revised edition, Power electronics, Pearson publication. page (21-30)
[19] C.R.Robertson, Fundamental electrical & electronic principles, Elsevier publication. chapter 3 page 78-81
[20] Jerry C. Whitaker,second edition, The electronics handbook, Taylor &Franics group. chapter 7 page 112-118
[21] BimalK.Bose, 'Modern Power Electronics and AC Drives', Pearson Education (Singapore) Pvt. Ltd., New Delhi, 2003 Chapter 4 page 51-54.