Single Converter Solar High Mast Light

[1]Stebin Mathew [2]Hanna Rose Thomas [3]Benfina P S [4]Gibiya George [5]Bestin S Nalpat
[1,2,3,4,5]UG Student
[1,2,3,4,5]Sahrdaya College and Engineering and Technology, Kodakara

Abstract

Single converter solar high mast lighting system is a project to design and implement a stand-alone MIMO converter solar power high mast light. The main focus of this project is to determine the options that are available to replace grid-powered street lamps with a stand-alone system that has the reliability to work under the worst conditions. The system's main circuit is a MIMO converter which is able to accommodate arbitrary number of sources and loads. The system consists of two inputs and outputs i.e. inputs as solar cell and power grid and outputs as battery and high mast light. It only employs a single inductor, which can reduce the complexity and cost of the system as well as simplify the current sensing. By sensing the inductor current and monitoring the switching signals of the switches, the input and output currents can be determined without employing additional current sensing circuitry.

Keyword- MIMO Converter, High Mast Light

I. INTRODUCTION

Light is crucial in everyday activity for the continuity of normal life. Sunlight can serve as a source of solar power which can be converted to electric power for both household and industrial utilization. Solar power is the generation of electricity from sunlight. Solar power is a predictably intermittent energy source, meaning that while solar power is not available at all times, we can predict with a very good degree of accuracy when it will not be available. One area of application of solar energy is found in the construction of solar powered Street lights.

In this project, it is concentrated on the region of solar powered high mast lighting system. This system consists of a single converter to control the lighting system and it is a MIMO converter. The lighting system luminate with high intensity, during darkness and vary the intensity accordance with the light available. MIMO converters have not received as much attention as MISO or SIMO converters. They are potentially able to combine the advantages of both MISO and SIMO topologies and provide a more cost-effective solution. The MIMO dc–dc converter topology proposed here have many salient features. An arbitrary number of input dc sources and passive loads can be accommodated. It can operate in both continuous conduction modes (CCM) and DCM. The input powers delivered by different dc sources can be individually regulated; thus, power budgeting between input energy sources can be accommodated. It only employs a single inductor, which can reduce the complexity and cost of the system as well as simplify the current sensing. By sensing the inductor current and monitoring the switching signals of the switches, the input and output currents can be determined without employing additional current sensing circuitry. The output voltages can be individually higher than the maximum input voltage or lower than the minimum input voltage.

The advantages of a stand-alone system are partially independent from the power grid, replacement of petroleum-fueled generators, and cost effective compared to running the power lines to remote areas.

II. SYSTEM DESCRIPTION

A. Block Diagram

The block diagram consists of multiple sources. In this topology, we are using two sources, one as SOLAR and other as Utility grid .other than that there are two switches which for controlling the converter and rest is the boost converter. The proper working of block diagram is for driving the load first solar will be on and then we get the output energy from the solar and if it doesn't meet the load requirements, then the rest will be taken from utility grid.
We can use no of sources in this.

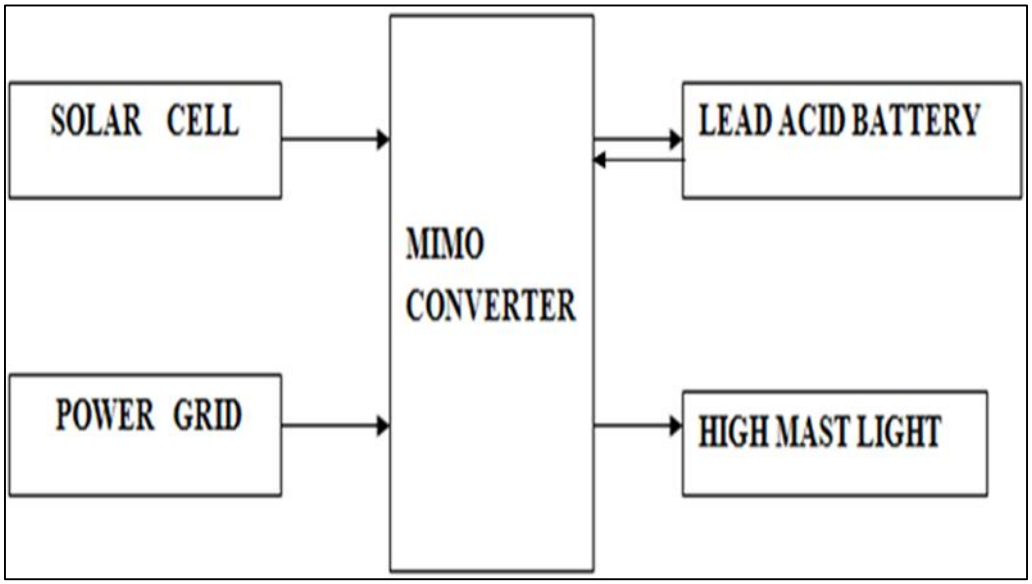

Fig. 1: Block diagram

B. Circuit Diagram

The circuit of the proposed structure is shown in Fig. 2. This structure is composed of two inputs and outputs i.e. inputs as solar cell and power grid and outputs as battery and high mast light. It only employs a single inductor, which can reduce the complexity and cost of the system as well as simplify the current sensing.

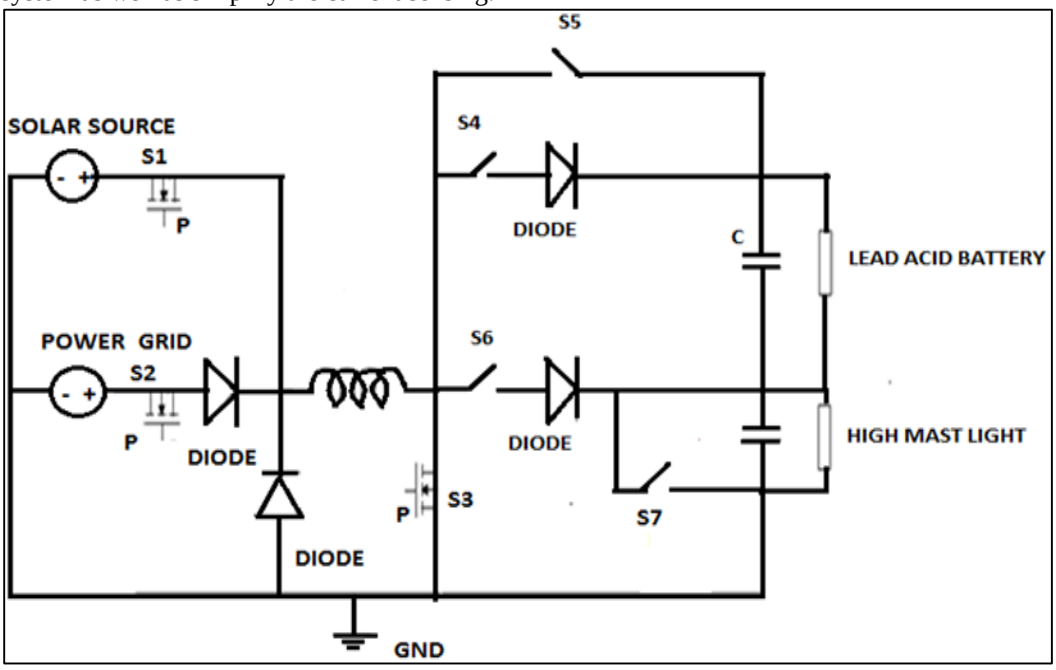

Fig. 2: Circuit Diagram

The converter is operated in three modes, they are

- Solar cell to battery charging.
- Battery discharging to high mast light.
- Power transmission from power grid to high mast light.

1) Mode 1: Solar Cell to Battery Charging

The equivalent circuit of the converter when it is operated in this mode is shown in Fig. 3. In this mode inductor is charged from solar cell, thus PWM switches s1 and s3 are in on state. Then the inductor discharges through switch s4 and hence battery is charged.

In this mode, the circuit act as a boost converter. When the switch is on, the inductor gets charged from the solar cell. And the inductor gets discharged through the battery when the switch is turned off. Hence the battery gets charged.

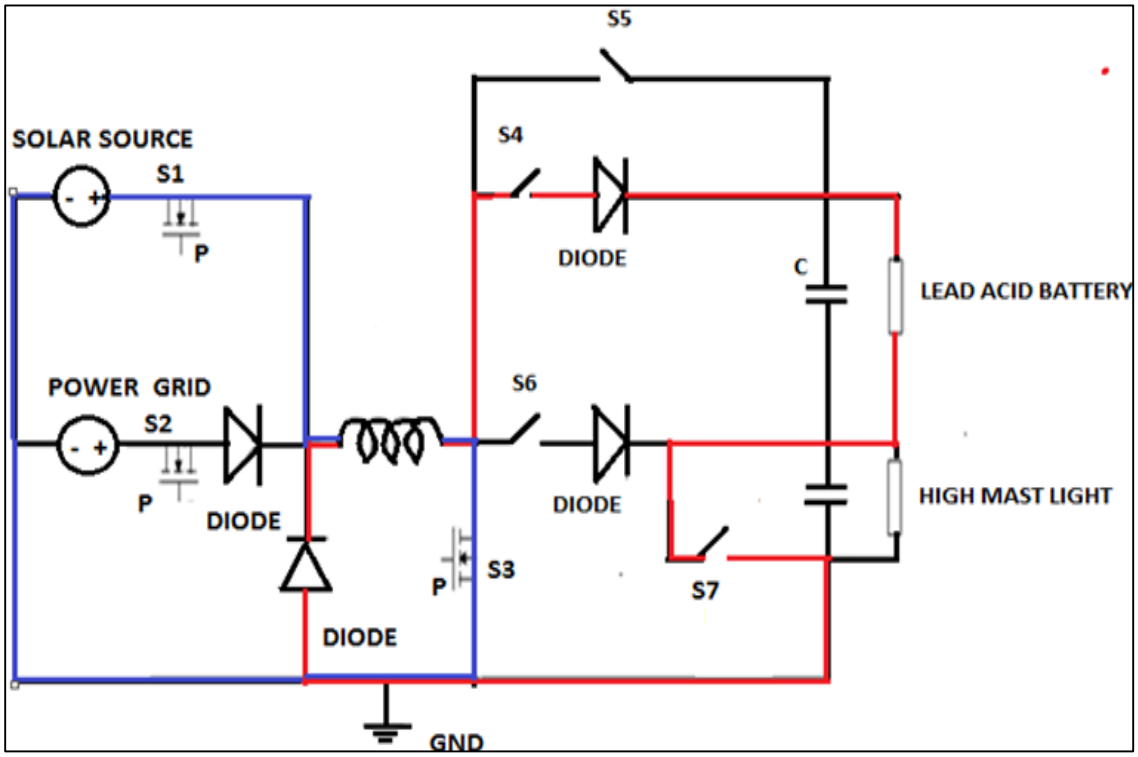

Fig. 3: Equivalent circuit of the first operation mode

2) Mode 2: Battery Discharging to High Mast Light

The equivalent circuit of the converter when it is operated in mode 2 is shown in Fig. 4.In this mode, battery is discharged through switches s5 and s3.Thus high mast light will glow. Voltage of solar cell and battery is compared. This mode will be working during night.

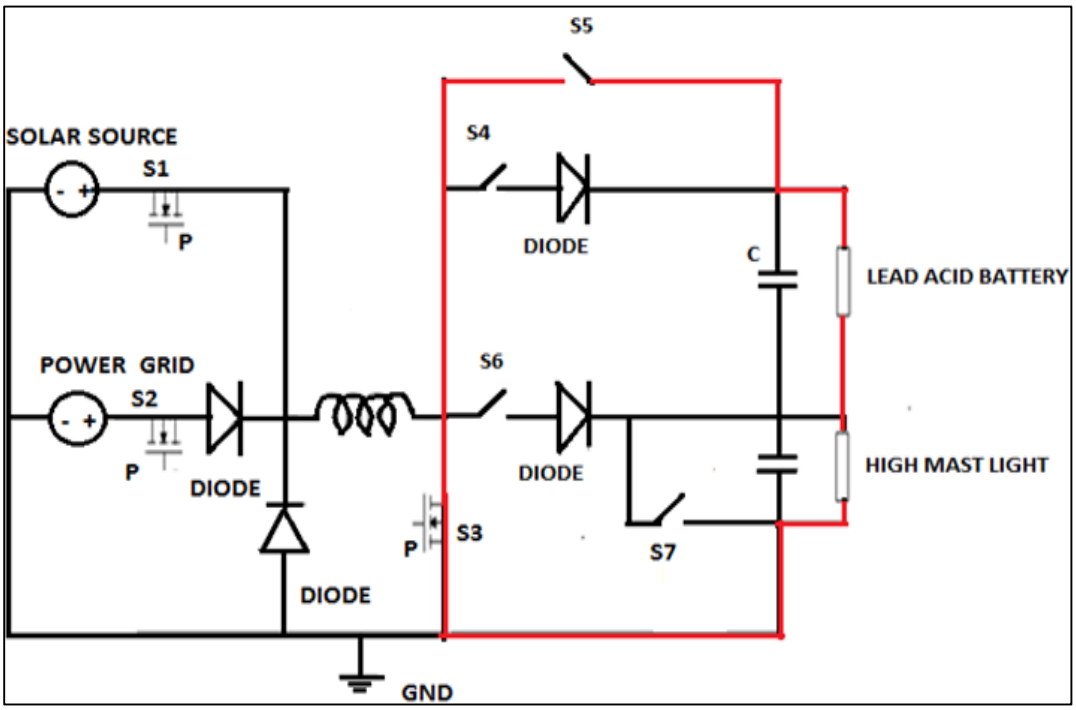

Fig. 4: Equivalent circuit of the second operation mode

3) Mode 3: Power Transmission from Power Grid to High Mast Light

In this mode, inductor gets charged from power grid.PWM switches s2 and s3 are on during this state. Then the inductor discharges through the high mast light and switch s6is on during this state. When the battery charge falls below a particular preset value, mode three will come into operation.

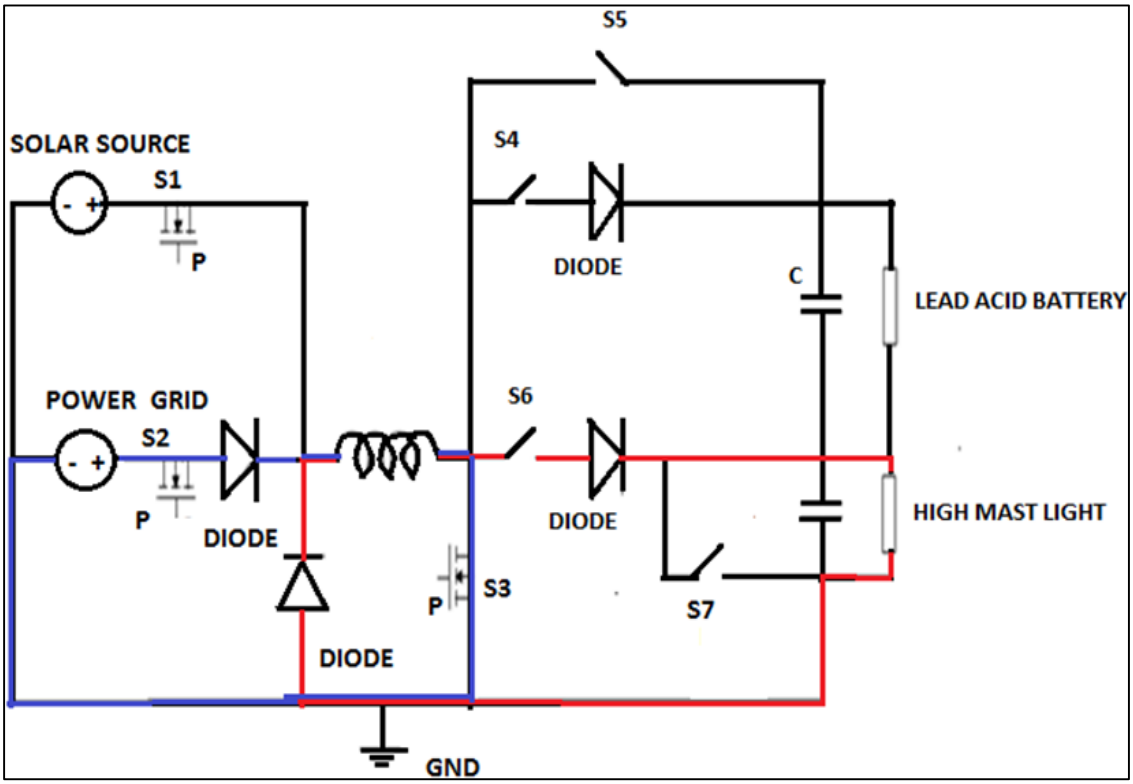

Fig. 5: Equivalent circuit of the third operation mode

III. HARDWARE RESULTS

The proposed converter was designed and implemented and are shown below. The system includes solar cells, high power light-emitting-diode (HP-LED), single converter (MIMO) and a Lead-acid battery. The generated solar power is used to charge the battery and it is then discharged through the load. It only employs a single inductor, which can reduce the complexity and cost of the system as well as simplify the current sensing. By sensing the inductor current and monitoring the switching signals of the switches, the input and output currents can be determined without employing additional current sensing circuitry.

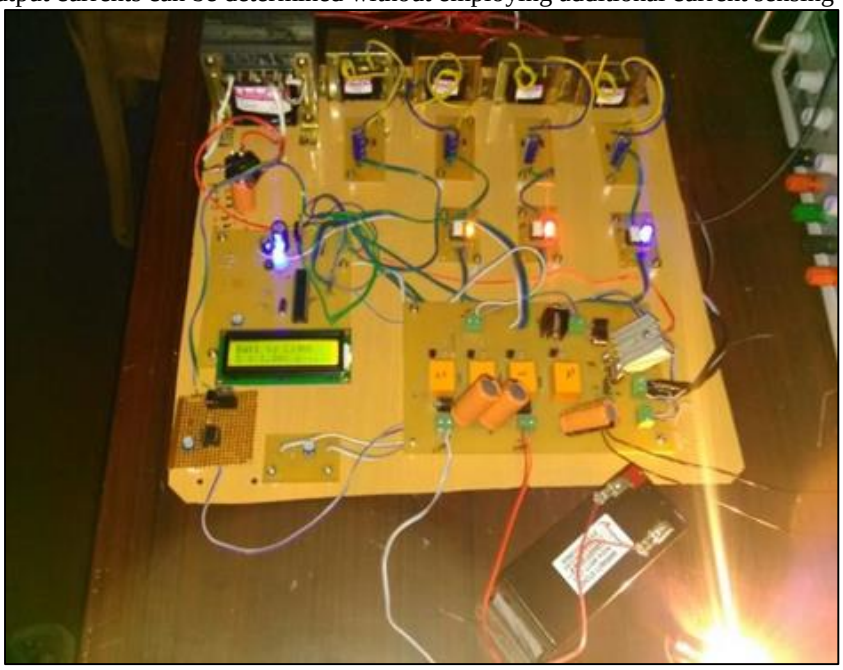

Fig. 6: Proposed Converter

The figure shown in below is the boost converter which is used. As the output of the solar is small and it cannot be depended every time, so we are using boost converter.

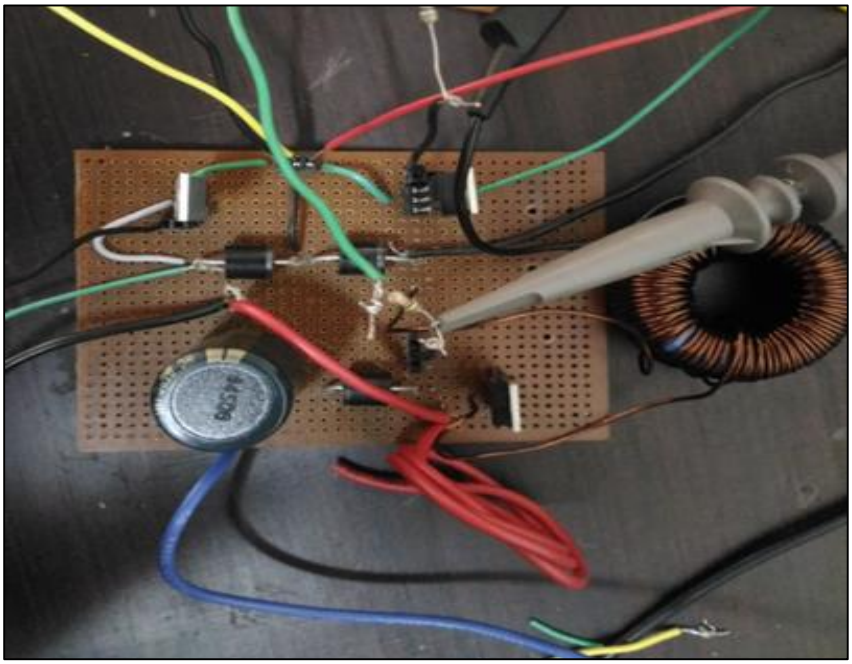

Fig. 7: Boost converter

IV. CONCLUSION

Sustainable energy sources and the power electronic systems for utilizing such energy sources have attracted much attention recently. The ability of multiport converters to mitigate the intermittency issues associated with these energy sources has made them attractive candidates for renewable energy conversion systems.

The proposed single converter solar high mast lighting system automatically works in different modes without any human intervention. The discussed system has used the most compact, simple and robust modules like MIMO converter which can be implemented easily in the present scenario. We designed the MIMO converter and simulated the circuit in MATHLAB and successfully obtained the desired result. Finally, we implemented the hardware of proposed system that operates in the three different modes as discussed above. All these modes are controlled using microcontroller ATMEGA 328.

There are many advantages with the proposed system when compared with the traditional techniques. The advantages include reduced energy costs, complete elimination of manpower, reduced maintenance cost, longevity, reliability etc. It is also having some of the disadvantages such as chances of theft of solar panel are there. Also the initial cost is high.

ACKNOWLEDGMENT

We hereby acknowledge our sincere gratitude to all persons who have helped us in completing our project. We are highly grateful to Mrs. Ashna Mohan, Assistant Professor, Electrical and Electronics Engineering Department, SCET, who happens to be our project coordinator for her constant support and encouragement.

We are greatly indebted to our project guide Mr. Anoop V.P, Assistant Professor, Electrical and Electronics Engineering Department, SCET for his valuable guidance in this Endeavour.

We are grateful to Mrs. Anns George, Head of the Department, Electrical and Electronics Engineering Department, SCET for giving us all the permissions and support for our project.

We are thankful to all the non-teaching staff for providing sufficient lab facilities and our classmates for their encouragement and cooperation without which our project would not have been possible.

Above all, we thank Lord Almighty for providing us with the courage and confidence to take up this project.

REFERENCES

[1] Hamid Behjati and Ali Davoudi, "A Multiple-Input Multiple-Output DC-DC Converter", IEEE Transactions on Industry Applications, vol. 49, no. 3, May/ June 2013.

[2] B. G. Dobbs and P. L. Chapman, "A multiple-input dc-dc converter topology," IEEE Trans. Power Electron., vol. 1, no. 1, pp. 6–9, Mar. 2003.

[3] A. Khaligh, J. Cao, and Y.-J. Lee, "A multiple-input dc–dc converter topology," IEEE Trans. Power Electron., vol. 24, no. 3, pp. 862–868, Mar. 2009.