e-ISSN: 2455-5703

Ground Improvement Techniques

[1]Nimisha Kachra [2]Megha k Patel [3]Shraddha D Patel
[1]Assistant Professor [2]M. Tech Student [3]M. Tech Student
[1,2,3]Department of Civil Engineering
[1]S.S.A.S.I.T, Surat, Gujarat, India [2,3]Pandit Deendayal Petroleum University

Abstract

In this paper main emphasis is put on methods for improvement of soft ground with the use of vibro compaction methods, Vacuum consolidation, Soil nailing, Grouting methods and dewatering methods. Vibro-compaction increases the density of the soil by using powerful depth vibrators. Vacuum consolidation is used for improving soft soils by using a vacuum pump. Preloading method is used to remove pore water over time. Vibro replacement stone columns improve the bearing capacity of soil whereas Vibro displacement method displaces the soil. Many ground improvement techniques are available to suit the particular needs of soil type, structure type and performance criteria. These techniques offer cost effective solutions, whilst reducing construction period considerably. Furthermore, these techniques also offer environmental friendly systems, which is important for urban areas.
Keyword - Dewatering, Grouting, Soil nailing, Vibrocompaction, Vibrodisplacement

I. INTRODUCTION

Ground improvement, is the modification of existing site foundation soils to provide better performance under design and/or operational loading conditions. Ground improvement techniques are used increasingly for new projects to allow utilization of sites with poor subsurface conditions. Previously, these poor soils were considered as economically unjustifiable or technically not feasible and are often replaced with an engineered fill or location of the project is changed. In short, Ground improvement is executed to increase the bearing capacity, reduce the magnitude of settlements and the time in which it occurs, retard seepage, accelerate the rate at which drainage occurs, increase the stability of slopes, mitigation of liquefaction potential, etc.

A. Aim of the Study

To Analyze The Behavior Of Concrete Using Innovative Materials: An Experimental Study.

B. Objective of Study

The objectives of our project are as follows:

- To provide an economical construction material.
- Addition of fibers in concrete to increase tensile strength.
- To check the ductile behavior of the concrete.
- To check the behavior of ECC-bendable concrete under Compression Split Tensile Test & Flexure.
- To investigate the effect of sand, super plasticizer & Polypropylene fibers on the behavior of ECC Bendable concrete.

II. CLASSIFICATION OF GROUND MODIFICATION TECHNIQUES

A. Mechanical Modification

Soil density is increased by the application of mechanical force, including compaction of surface layers by static vibratory such as compact roller and plate vibrators.

B. Hydraulic Modification

Free pore water is forced out of soil via drains or wells.

C. Course Grained Soils

It is achieved by lowering the ground water level through pumping from boreholes, or trenches. In fine grained soils the long term application of external loads (preloading) or electrical forces (electrometric stabilization.

D. Physical and Chemical Modification

Stabilization by physical mixing adhesives with surface layers or columns of soil. Adhesive includes natural soils industrial by products or waste. Soil stabilization by heating and by freezing the ground is considered thermal methods of modifications.

- Type and degree of improvement required
- Type of soil , geological structure, seepage conditions
- Cost
- Availability of equipment and materials and the quality of work required
- Construction time available
- Possible damage to adjacent structures or pollution of ground water resources
- Durability of material involved (as related to the expected life of structure for a given environmental and stress conditions).

Based on the soil conditions, a suitable method of ground improvement should be considered keeping in view of the economic feasibility as well as the time frame. In practice, ground improvement is widely used in a broad construction spectrum from industrial, commercial and housing projects to infrastructure construction for dams, tunnels, ports, roadways and embankments. This paper presents four different ground improvement techniques along with a case history for each of the technique as an example.

III. MODIFICATION TECHNIQUES

A. Vibro-Compaction

Vibro-compaction, sometimes referred to as Vibrofloation, is the rearrangement of soil particles into a denser configuration by the use of powerful depth vibration.Vibrocompaction is a ground improvement process for densifying loose sands to create stable foundation soils. The principle behind vibrocompaction is simple. The combined action of vibration and water saturation by jetting rearranges loose sand grains into a more compact state. Vibrocompaction is performed with specially-designed vibrating probes. Both horizontal and vertical modes of vibration have been used in the past. The vibrators used by TerraSystems consist of torpedo-shaped probes 12 to 16 inches in diameter which vibrates at frequencies typically in the range of 30 to 50 Hz. The probe is first inserted into the ground by both jetting and vibration. After the probe reaches the required depth of compaction, granular material, usually sand, is added from the ground surface to fill the void space created by the vibrator. A compacted radial zone of granular material is created.

B. Vibroflotation

The vibroflotation process (VF) is used to densify soil formations which do not have an optimum relative density - mainly naturally deposited or backfilled granular soils, such as sands and gravels. Under the influence of the horizontal vibrations generated by the oscillating vibrator, the soil particles are rearranged and adopt a denser packing. After reaching the final depth, supported by water jetting, the depth vibrator is gradually retracted creating a densified zone of 2 to 4 m in diameter. The reduction in pore volume is evidenced on the surface by the formation of a settlement crater around the compaction point which must be backfilled with suitable coarse material.

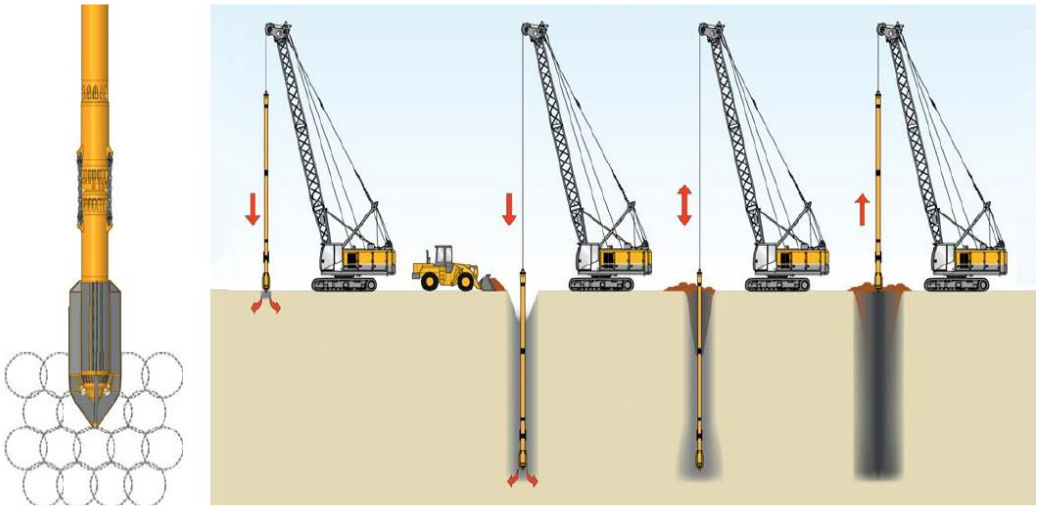

Fig. 1 : Work Sequence for Vibroflotation Process

C. Backfill Material/Flushing Medium

Suitable backfill materials are silt-free quarry or river gravels, and silt-free sand-gravel mixtures. Fresh or salt water taken from groundwater or rivers is suitable as flushing medium. In certain ground conditions a combination of water and air flush has also proved successful.

D. Vibro Displacement

1) Top feed

Soils with fines content of more than 10 % can no longer be rearranged and densified by Vibrations. Here, the achievable ground improvement consists in the construction of load bearing stone columns. With the VD wet "Top Feed" process, the depth vibrator is lowered to the specified depth supported by water or water/air flush. Backfill material is then introduced at the ground surface to the annular space created by the vibrator and moves through the annular space to the vibrator tip. By repeatedly raising and lowering the vibrator in steps of around 0.3 to 0.5 m, the backfill material is densified and displaced radially into the surrounding soil until a pre-selected criterion (hydraulic pressure, volume of back fill material) is reached.

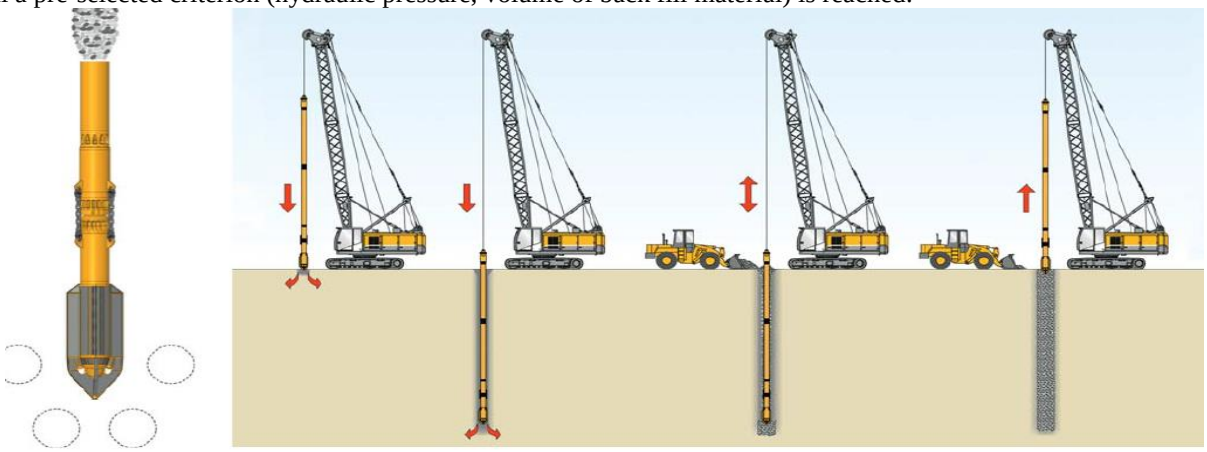

Fig. 2 : Work Sequence for Construction of a Stone Column

2) Bottom feed:

Soils with fines content of more than 10 % can no longer be rearranged and densified by vibrations. Here, the achievable ground improvement consists in the construction of load-bearing stone columns. With the VD dry "Bottom Feed" process, a leader-mounted bottom-feed vibrator is lowered to the specified design depth assisted by air flush and positive crowd pressure. The surrounding soil is displaced laterally as a result. The coarse granular backfill material is delivered directly to the tip of the vibrator via a material transfer hopper and a material transfer pipe attached to the front of the vibrator. By repeatedly raising and lowering the vibrator in steps of around 0.3 to 0.5 m, the backfill material is densified and displaced laterally into the surrounding soil. The backfill criterion (volume, pressure) is determined and monitored on an individual basis.

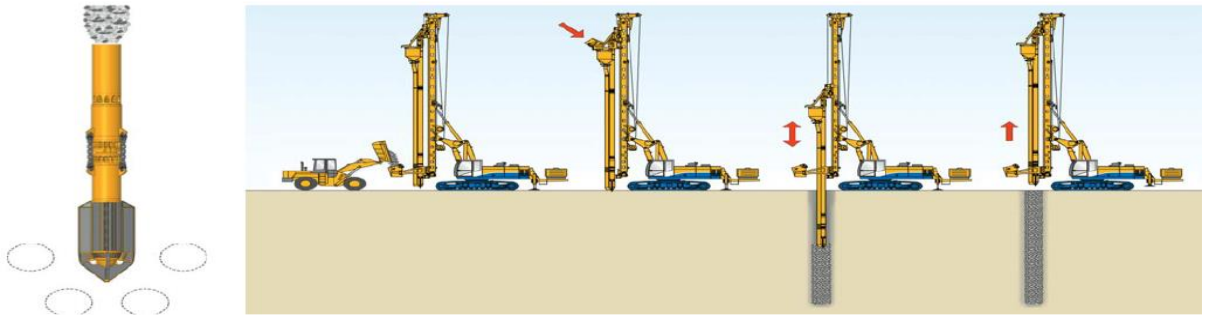

Fig. 3 : Work Sequence for Construction of Stone Column

E. Soil Nailing

The fundamental concept of soil nailing consists of reinforcing the ground by passive inclusions, closely spaced, to create in-situ soil and restrain its displacements. The basic design consists of transferring the resisting tensile forces generated in the inclusions into the ground through the friction mobilized at the interfaces. Resistance.

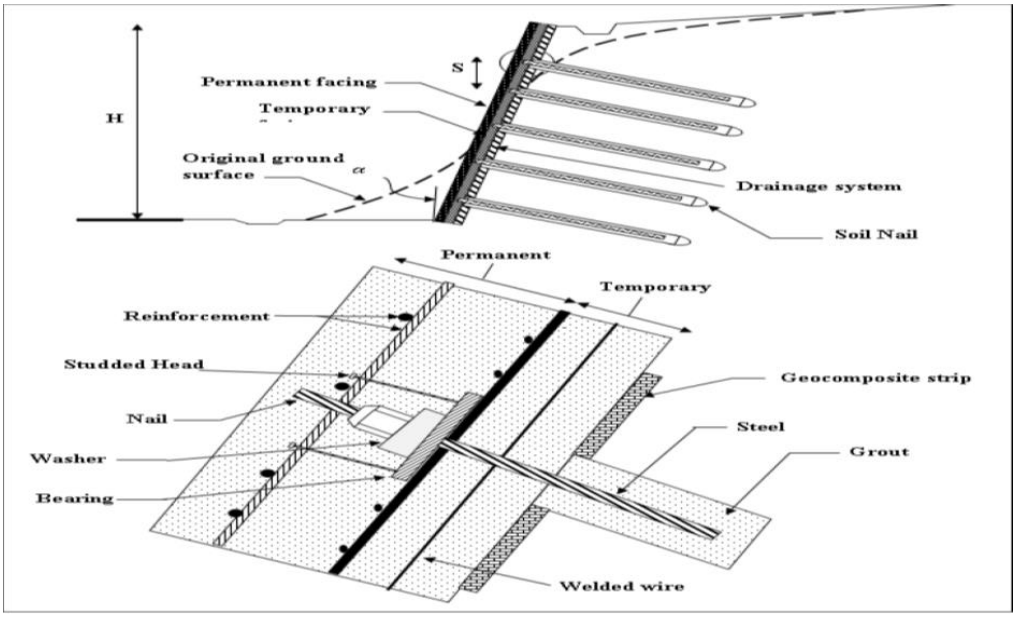

Fig. 4: Typical Cross Section of Soil Nailed Wall

IV. GROUTING

Grouting is the injection of pumpable materials into a soil or rock formation to change the physical characteristics of the formation. Grouting selection considerations are Site specific requirement, Soil type, Soil groutability, Porosity. Grouting can be prevented by Collapse of granular soils, Settlement under adjacent foundations, Utilities damage, Day lighting. Grouting can provide increased soil strength and rigidity, reduced ground movement, Predictable degree of improvement.

A. Different Grouting Techniques

1) Compaction Grouting

Compaction grouting is a soil injection with low workability cement paste that remains homogeneous without entering in the soil pores. The cement mass extends, soil is moved and finally compacted.

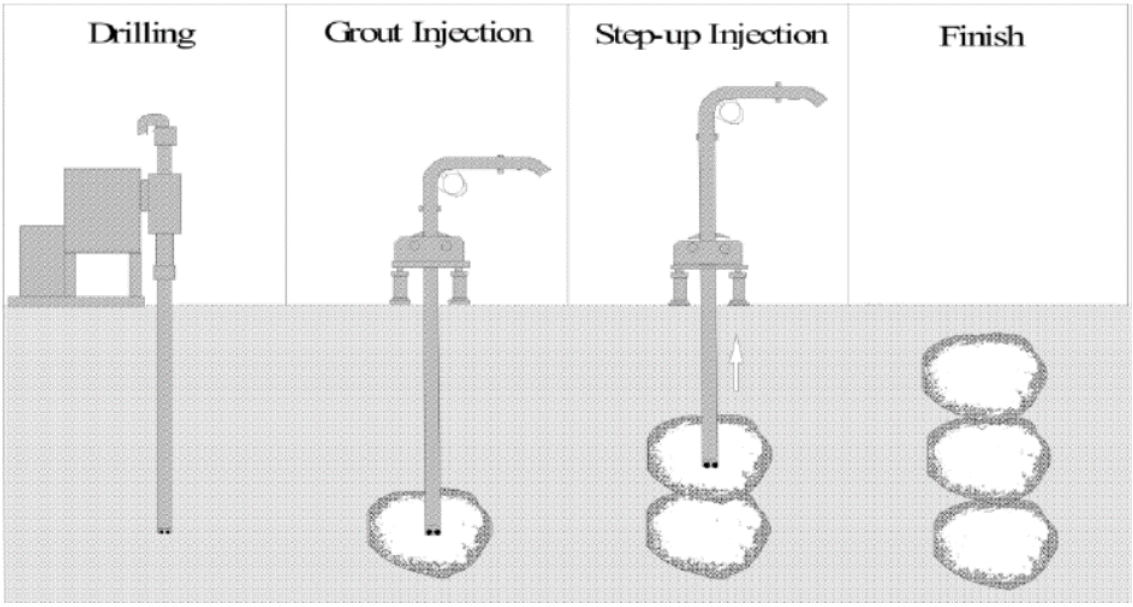

Fig. 5: Compaction Grouting Implementation

2) Permeation Grouting

Permeation grouting consists of the injection of a low-viscosity fluid in the soil pores without changes in the soil physical structure. The main goal of permeation grouting is both to strengthen soils through particle cementation (to stabilize the links between

particles) and to waterproof ground by filling its pores with injected fluid. This method improves the soil physical and mechanical characteristics, successfully stabilizes the excavation walls in soft soils, controls the groundwater migration in order to implement the underpinnings at the existing foundations and prevents the effects of earthquakes – compaction and soil liquefaction. Permeation grouting is a technology used to mitigate liquefaction that is suitable for un-compacted soils solidification in order to reduce the risks of compaction and liquefaction that may occur as result of possible earthquakes.

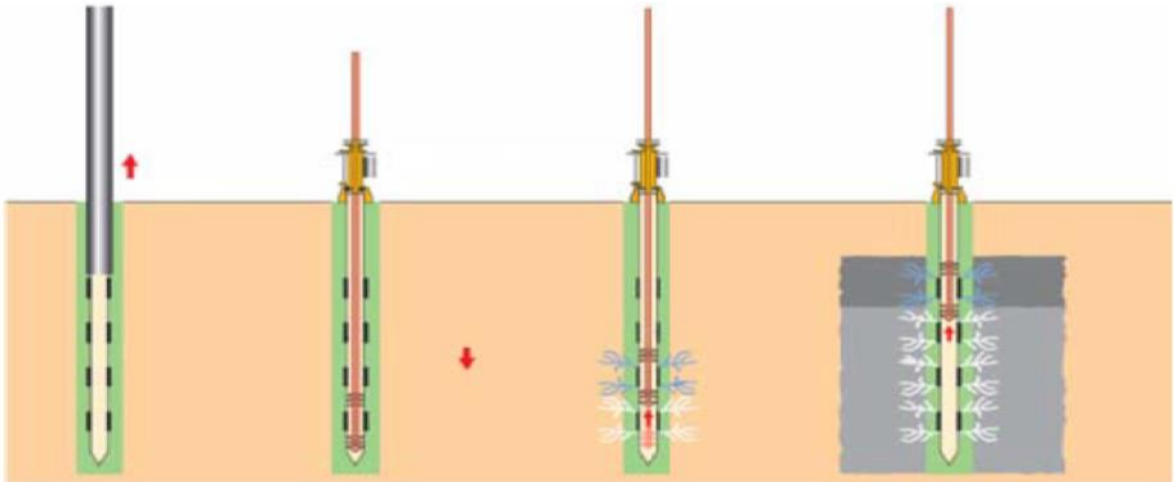

Fig. 6: Schematic Showing Process of Permeation Grouting

3) Jet Grouting:

Applications of the jet grouting system fall into three broad categories: underpinning or
Excavation support, stabilization of soft or liquefiable soils, groundwater or pollution control. The method consists of soil injection of a mixed fluid at high pressure forming jets that erode and replace the existing soil with the injection mixture. In general this method begins by drilling small-diameter holes (90-150 mm) up to the final injection depth. Cement mixture is injected into the soil with a metal rod that runs a rotational and withdrawal motion whilst.

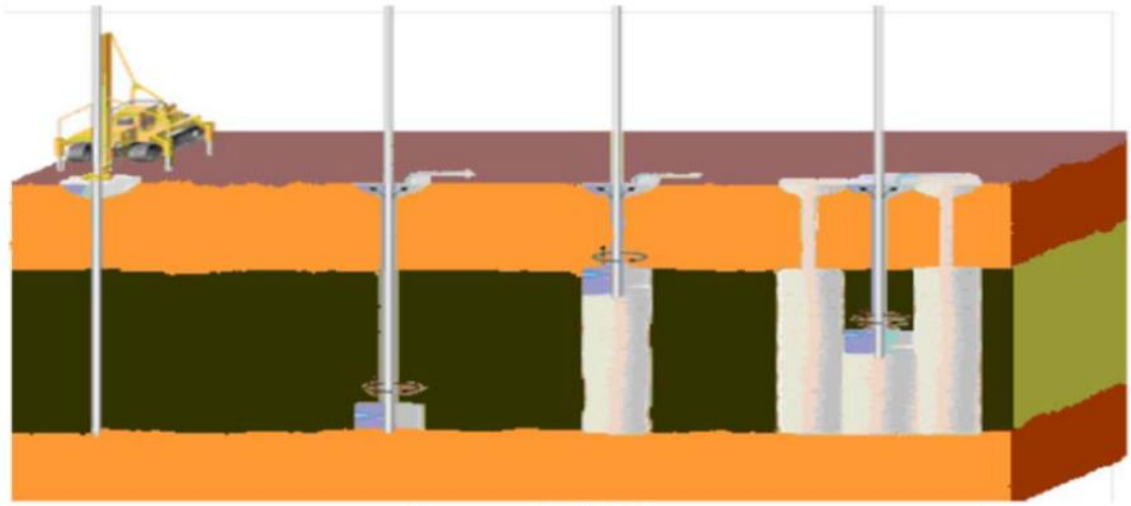

Fig. 7: Jet Grouting Method

V. DEWATERING – CONTROL OF GROUNDWATER

Construction of buildings, powerhouses, dams, locks and many other structures requires excavation below the water table into water-bearing soils. Such excavations require lowering the water table below the slopes and bottom of the excavation to prevent ravelling or sloughing of the slope and to ensure dry, firm working conditions for construction operations. Groundwater can be controlled by means of one or more types of dewatering systems appropriate to the size and depth of the excavation, geological conditions, and characteristics of the soil.

Construction sites are dewatered for the following purposes:

- To provide suitable working surface of the bottom of the excavation.
- To stabilize the banks of the excavation thus avoiding the hazards of slides and sloughing.

– To prevent disturbance of the soil at the bottom of excavation caused by boils or piping. Such disturbances may reduce the bearing power of the soil.

A number of methods are available for controlling the inflow of water into an excavation; the choice of method will depend on the nature and permeability of the ground, the extent of the area to be dewatered, the depth of the water table below ground level and the amount by which it has to be lowered, the proposed methods of excavation and ground support, the proximity of existing structures, the proximity of water courses etc.

VI. DEWATERING METHODS

A. Sumps and sump pumping:

A sump is merely a hole in the ground from which water is being pumped for the purpose of removing water from the adjoining area (Fig 9.1). They are used with ditches leading to them in large excavations. Up to maximum of 8m below pump installation level; for greater depths a submersible pump is required. Shallow slopes may be required for unsupported excavations in silts and fine sands. Gravels and coarse sands are more suitable. Fines may be easily removed from ground and soils containing large percent of fines are not suitable. If there are existing foundations in the vicinity pumping may cause settlement of these foundations. Subsidence of adjacent ground and sloughing of the lower part of a slope (sloped pits) may occur. The sump should be preferably lined with a filter material which has grain size gradations in compatible with the filter rules. For prolonged pumping the sump should be prepared by first driving sheeting around the sump area for the full depth of the sump and installing a cage inside the sump made of wire mesh with internal strutting or a perforating pipe filling the filter material in the space outside the cage and at the bottom of the cage and withdrawing the sheeting.

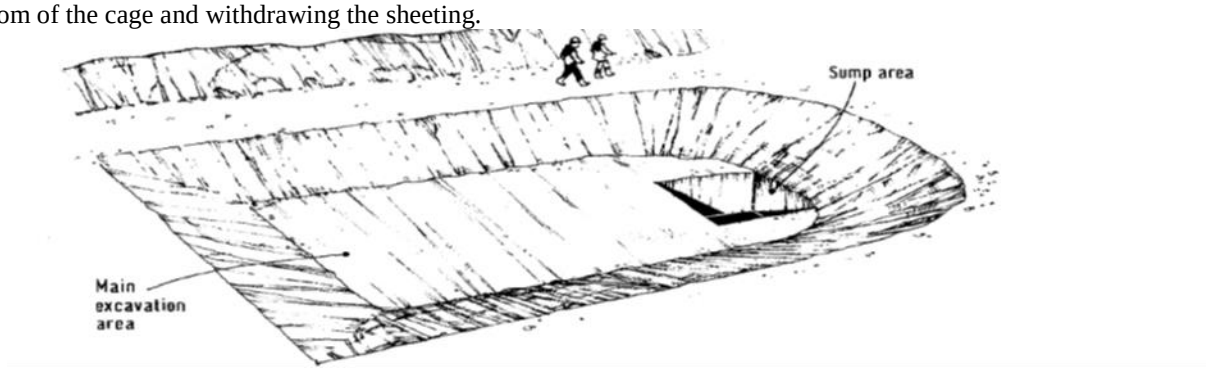

Fig. 8: Sumps Outside Main Construction Area

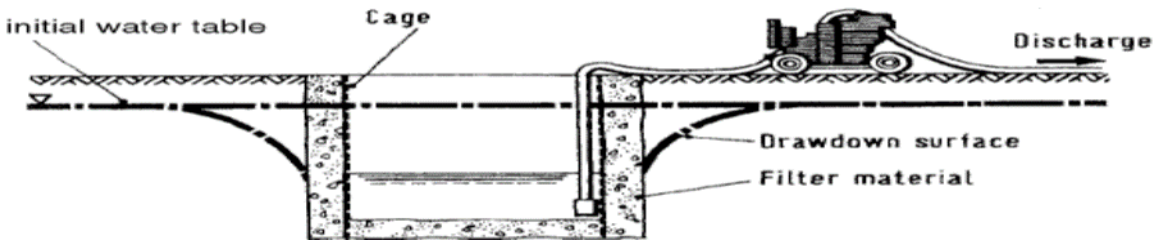

Fig. 9: Pumping From Sumps

B. Wellpoint Systems:

A wellpoint is 5.0-7.5 cm diameter metal or plastic pipe 60 cm – 120 cm long which is perforated and covered with a screen. The lower end of the pipe has a driving head with water holes for jetting. Wellpoints are connected to 5.0-7.5 cm diameter pipes known as riser pipes and are inserted into the ground by driving or jetting. The upper ends of the riser pipes lead to a header pipe which, in turn, connected to a pump. The ground water is drawn by the pump into the wellpoints through the header pipe and discharged. The wellpoints are usually installed with 0.75m – 3m spacing. This type of dewatering system is effective in soils constituted primarily of sand fraction or other soil containing seams of such materials. In gravels spacing required may be too close and impracticable. In clays it is also not used because it is too slow. In silts and silt – clay mixtures the use of well points are aided by upper (0.60m – 0.90m long) compacted clay seals and sand-filtered boreholes (20cm – 60cm diameter). Upper clay seals help to maintain higher suction (vacuum) pressures and sand filters increase the amount of discharge. Filtered boreholes are also functional in layered soil profiles.

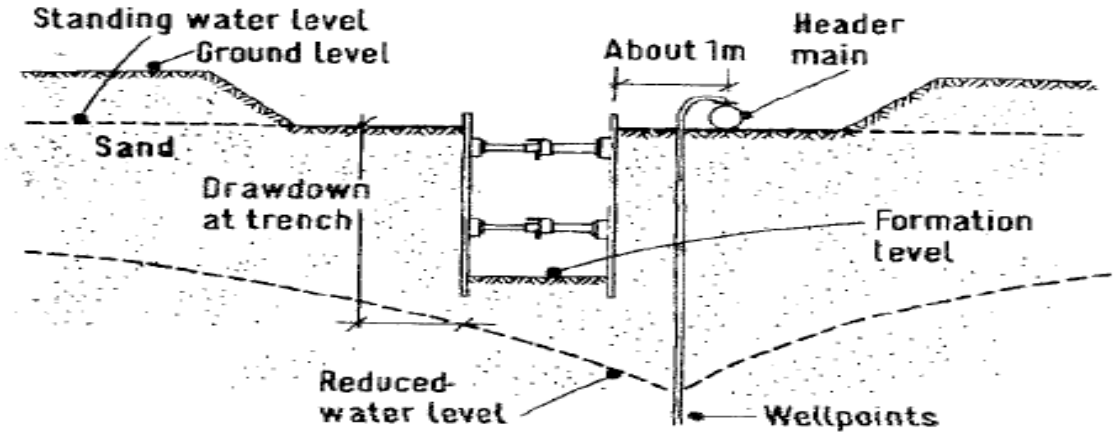

Fig. 10: Single Sided Wellpoint System

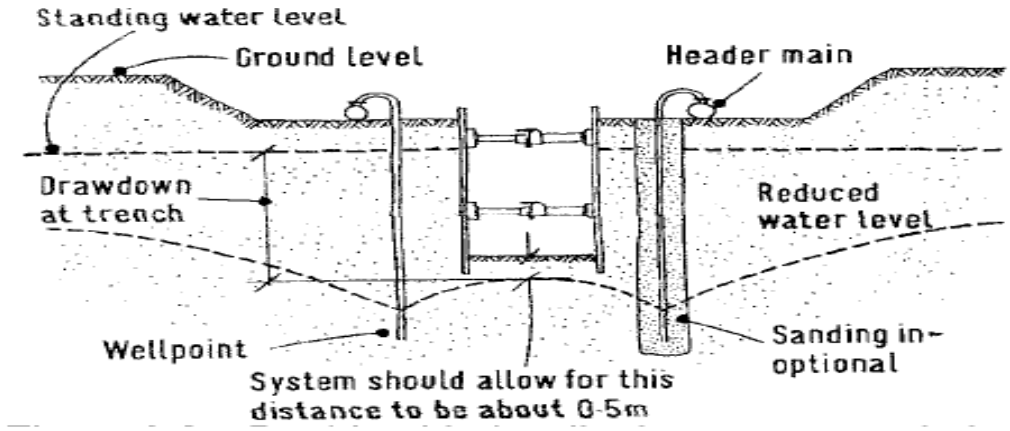

Fig. 11: Double Sided Well Point System

C. Deep Wells

When water has to be extracted from depths greater than 8 m and it is not feasible to lower the type of pump and suction piping used in shallow wells to gain a few extra meters of depth the deep wells are such and submersible pumps installed within them. A cased borehole can be sunk using well drilling or bored piling rigs to a depth lower than the required dewatered level. The diameter will be 150 – 200 mm larger then the well inner casing, which in turn is sized to accept the submersible pump. The inner well casing has a perforated screen over the depth requiring dewatering and terminates below in 1 m of unperforated pipe which may serve as a sump for any material which passes the filter. After the slotted PVC or metal well screen (casing) has been installed it is surrounded by backfill over the unperforated pipe length and with graded filter material over the perforated length as the outer casing progressively withdrawn.

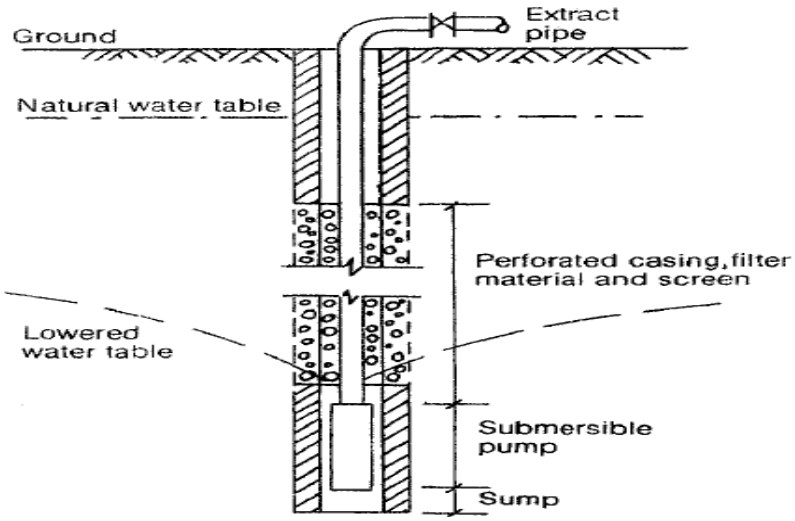

Fig. 12: Typical deep well system

VII. CONCLUSION

Ground Improvement techniques forms technically sound and cost effective solution where the sub soils are weak and needs to be treated to enable the intended construction. Its applicability has been proven in the recent past for a wide range of structures such as roads, runways, ports, power plants, railways, dams, slope stabilisation, excavations, tunnelling and other infrastructure facilities. These techniques have been used all over the world for a wide range of soils starting from loose sands, silts, marine clays to weak rocks. Based on the soil conditions, loading intensity and intended performance, an appropriate ground improvement technique can be designed to attain the desired performance. These techniques are available to suit the particular needs of soil type, structure type and performance criteria. Furthermore, these techniques also offer environmental friendly systems, which is important for urban areas.

REFERENCES

[1] http://pecivilexam.com/Study_Documents/Const-Materials-Online/Dewatering.pdf
[2] http://rdso.indianrailways.gov.in/works/uploads/File/soil.pdf
[3] http://www.nptel.ac.in/courses/105104034/lecture_pdf/lec3.pdf
[4] http://www.docsity.com/en/ground_modification_techniques_-_ground_improvement_-_lecture_notes_/310201/