Load Forecasting using Fuzzy Logic Tool Box

Manish Kumar Singla
Department of Electrical and Instrumentation Engineering
Thapar Institute of Engineering and Technology, Patiala, India

Sikander Hans
Department of Electrical and Instrumentation Engineering
Thapar Institute of Engineering and Technology, Patiala, India

Abstract

The main element for load forecasting is power system energy management system. Load forecasting helps to reduce the generation cost, spinning reserve capacity and increase the reliability of power system. The unit commitment, economic allotment of generation preservation schedule is crucial for short term load forecasting. In present many techniques have been used for load forecasting, but Artificial Intelligence Technique (Fuzzy Logic and ANN) gives better efficiency as contrast to conventional technique (Regression and Time Series). In this paper, the author main purpose is to reduce the error in the middle of the forecasted load and actual load value. The paper represents a technique of short term load forecasting using fuzzy logic. Using mamdani implication the fuzzy rule base are prepared. The software used for this is Matlab simulink and fuzzy tool box. By using triangular membership function the forecasted load results are obtained.

Keywords- Component, Fuzzy Logic, Short Term Load Forecasting, Absolute Percentage Error, Fuzzy Interface System, Mamdani

I. INTRODUCTION

The energy quality and reliability to the customer is the main objective of the utility [1]. As energy requirement of the customers changes every minute, as the human activities regulates throughout the day. Therefore estimating the load demand of the future becomes the priority task in order to meet the desired energy requirements in the future. In planning, operation and control of an electrical power system load and energy lost, the load forecasting plays an important role in system. Load forecasting is the estimation of the value of a variable (or set of variables) at a future point in time [2]. There are mainly four categories of load forecasting, they are classified as:

1) Very short term load forecasting: In this category load is forecasted from few minute to few hour time duration.
2) Short term load forecasting: in this category load is forecasted for few hours to few day time duration.
3) Medium term load forecasting: In this category the load is forecasted for few weeks to few months' time duration.
4) Long term load forecasting: In this category the load is forecasted for a one year to more than one year time duration.

In this paper the author have dealt with short term load forecasting. It is most important and useful operation for planning and control of power generation as it help in establishing the work plan of the power plant and helps in determine the production group for the power plant. Short term load forecasting also helps utility in designing of infrastructure, switching of load, purchasing etc. So it becomes the necessity to forecast the load correctly for required energy production in order to compete in the market [3-5].

Due to uncertainties in power system like wear and tear in the machines, various drops in the transmission line, instability in voltage and frequency, fluctuations and change in weather condition, makes it very difficult to deal with power system problem through mathematical formulation. For short term load forecasting the mathematical model used is fuzzy logic. Fuzzy logic is multi value logic which evaluate its data with respect to Boolean logic (yes or no, true or false). The fuzzy logic uses weather data like temperature, load as input and load as output data for load forecasting. The below Fig. 1. Gives the configuration of fuzzy logic.

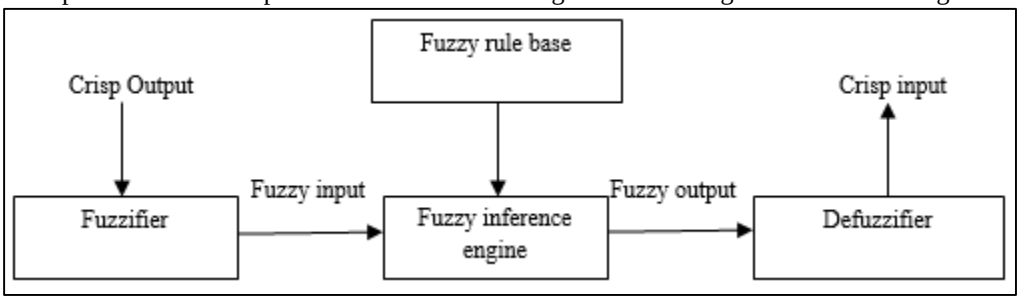

Fig. 1: Fuzzy Logic Configuration

The application of fuzzy logic is that there is no need of mathematical model mapping inputs to output and no need for precise inputs. Fuzzy logic load over other mathematical model or method because of its less forecast error than the other mathematical model. During reasonable fluctuation of the input data i.e. weather parameter like humidity, temperature etc. Fuzzy

set, IF-Then fuzzy rule base, linguistic variables, possibility distribution are the basic concept of the fuzzy logic system. The mathematical input data relationships are decoded with the If-Then rule base [6].

II. DATA DESCRIPTION AND ANALYSIS

Data collected from PSPCL, 66 kv sub-station type-C grid, bathinda is asessed and then data is adjusted to fuzzy logic model. Load forecasting has economic and reliable operation. The fuzzy model is used because to reduce the percentage error and to get the proper load forecasting. In this paper the short term load forecasting is done by using the 24 hour load. The result of fuzzy logic model is compared with the actual load data. The main purpose is to reduce the error in the system.

In the load station the load varies time to time. In load station it is observed that the load is stable at 1.00am to 5.30 am and then it rises instantly around 8.00 am and then the load slightly goes down around 12.00 noon. After 12.00 noon the load goes slowly-slowly decreasing till 5.30 pm and then the load increases slowly-slowly till 7.00 pm. In the load station it is observed that the load varies hour by hour and minute by minute. It is observed that in normal days the load not varies very much but in weekday (Saturday, Sunday) or holiday the load varies very much as seems to other days. The load varies with time due to the people working time, leisure time, sleeping time etc.

III. SHORT TERM LOAD FORECASTING

Short term load forecasting is basically used for the small time period i.e. one hour to seven days to predict the load in the system. Short term load forecasting has lot of importance [7] because it gives proper and profitable management in electrical utilities.

The main requirement of short term load forecasting is that it has high accuracy and speed. In India there is lot of wastage of power in the transmission, generation, distribution. It happens due to lack of forecasting in India.

A. Block Diagram and Flow Chart

The main purpose of this paper is to do short term load forecasting by taking time, load. By using fuzzy set techniques the classification of the load data is done.

The Fig. 2. Shows the block diagram of fuzzy logic methodology [8]. The input of the fuzzy are hourly data, temperature and time are given to the fuzzy model. The fuzzy interface is the heart of the system. To find the accuracy of the load forecast it depends upon the rule prepared by the forecaster. The defuzzification block converts the fuzzified output to the crisp output and it is displayed in graph, this graph is known as load curve. The load curve graph is shown in scope.

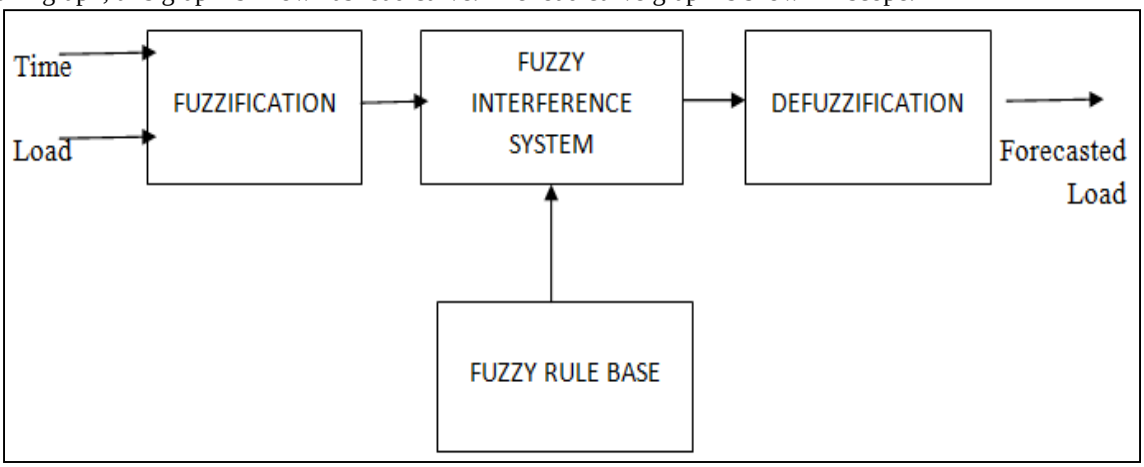

Fig. 2: Fuzzy logic Block Diagram

The different parameters such as temperature and load are used in the process of the fuzzification. When the fuzzification is done then the fuzzy rule base are prepared. In the rule base system If-Then rule is prepared which is the heart of the fuzzy system as shown in Fig. 3.

The output obtained is forecasted load which is compared with actual load and the predicted load. The short term load forecasting is used to improve the error in the system. By improving the error the accuracy of the system is increased.

IV. FUZZY LOGIC MODEL DESCRIPTION

The implementation of fuzzy logic of short term load forecasting is consists of four stages.

A. Fuzzy Rule Base Design

This methodology is given by wan and kosko which is used here. This method consists of five steps:

Step: 1: Make a list of input and output variables using statistical analysis, and/or operator. In this paper there are two input variables and one output variables [9]. The output variable load is forecasted load and the input variables are:

1) Time
2) Load
3) Forecasted load

Step: 2: The input and output variable is done by resolving the input and output behavior to the membership value [0,1].
Step: 3: After resolving the input and output variables now select the shape of fuzzy membership for each variable, triangular, trapezoidal, Gaussian and bell shaped membership function.
Step: 4: for every input and output variable, define the number of fuzzy membership function. The given variable need not be equal nor must the number of function for all variable will be equal [10].
Time data is fuzzified into six fuzzy sets as: midnight, morning, for noon, after noon, evening, night.

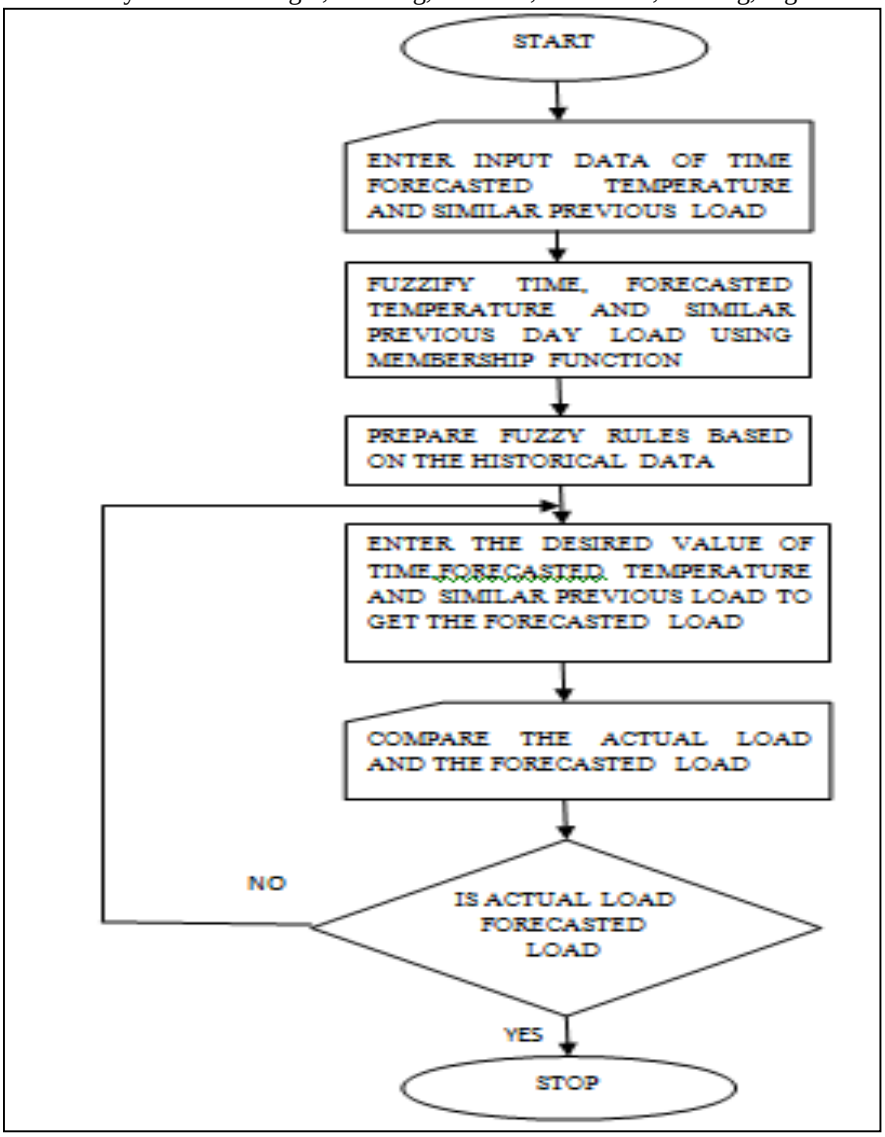

Fig. 3: Fuzzy logic Flow chart for Short term load forecasting

Load data is fuzzified into four fuzzy sets as: very low, low, average, high.
Step: 5: Now we have to train the data in fuzzy model. Pair of input and output data is known as training data. For e.g. if 'time' is midnight and 'load' is average Then 'load' is high.

B. Compute the Forecast Value

From input space to output space a nonlinear mapping implements a fuzzy inference system. The mapping is done by a fuzzy If-Then rule.

To estimate the forecast from the fuzzy forecast then the defuzzification is performed. A numerical forecast sensitive to the entire rule is centroid of area.

$$\text{Centroid of area } M_{coa} = \frac{\int z u_A(Z) dz}{\int z \; u_A(Z) \; Z \; dx} \qquad (1)$$

C. Test the Performance of Rule Base

In the short term load forecasting the accuracy is tested by using a historical data to obtain the fuzzy rule base. If it is unacceptable then the and/or shape of fuzzy membership function is changed and new rule base is prepared. To design the correct rule base system, the testing of system is repeated many times and shapes of membership function also [10]. The minimum error measure for the test set is selected for forecasting. This method is known as train and set. This is very useful for the large data set.

D. Error Analysis

Short term load forecasting is done because to reduce the error in the system. In this author find the absolute percentage error and mean absolute percentage error.

$$\text{MAPE} = \frac{1}{n}\sum_{i=1}^{n}\left|\frac{\text{Actual(i)} - \text{forecast(i)}}{\text{Actual(i)}}\right| . 100\% \qquad (2)$$

1) Fuzzification

Process of converting crisp values to the degree of membership related to the fuzzy set is known as fuzzification. The input and output may be non-linear but linear membership function is used for the simplicity. In this paper rectangular membership function is used for the input and output.

The time and load are the two inputs taken for the short term load forecasting. As shown in Fig. 4. Time is divided into six fuzzy sets:

1) Mid night
2) Morning
3) For. Noon
4) After noon
5) Evening
6) Night

The Fig . 5. Shows load divided into four fuzzy sets of member ship function:

1) Very low
2) Low
3) Average
4) High

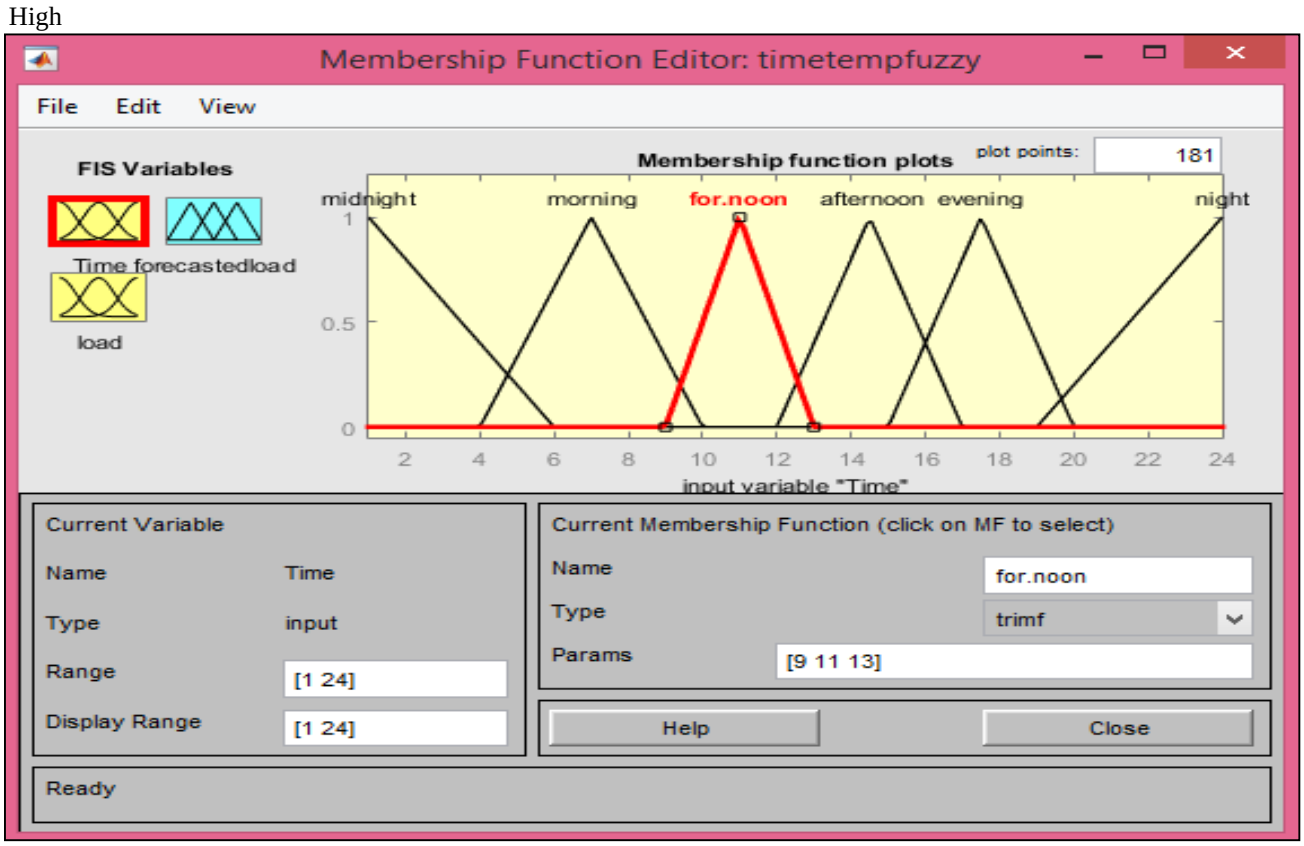

Fig. 4: Membership functions of time

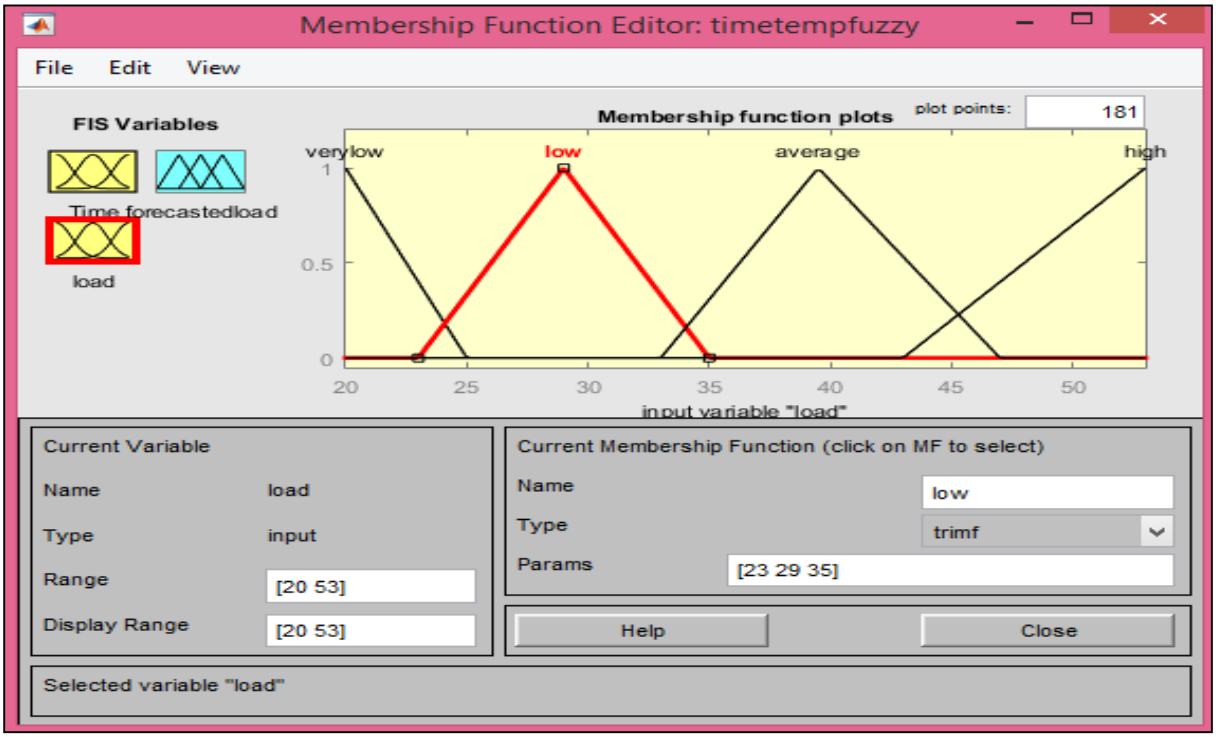

Fig. 5: Membership functions of load

Fig. 6. Shows forecasted load (output) divided in to four fuzzy sets membership function.

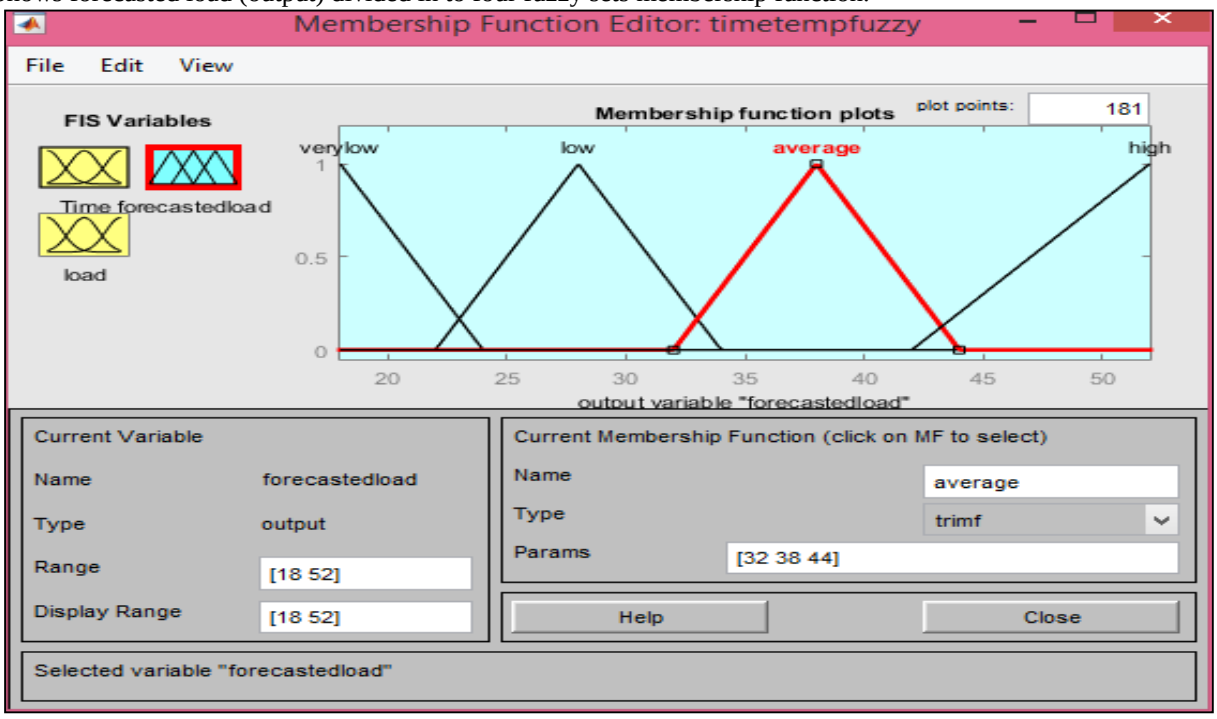

Fig. 6: Membership functions of forecasted load

2) Fuzzy Rule Base

The fuzzy rule base is the heart of the fuzzy system. In the fuzzy rule base If-Then rule is used to get the load forecasted output. Some rules are as follows and shown in Fig. 7:

- If (time is mid-night) and (load is very low) then (forecasted load is very low).
- If (time is mid-night) and (load is low) then (forecasted load is low).
- If (time is morning) and (load is very low) then (forecasted load is very low).
- If (time is morning) and (load is low) then (forecasted load is low).
- If (time is evening) and (load is average) then (forecasted load is average).

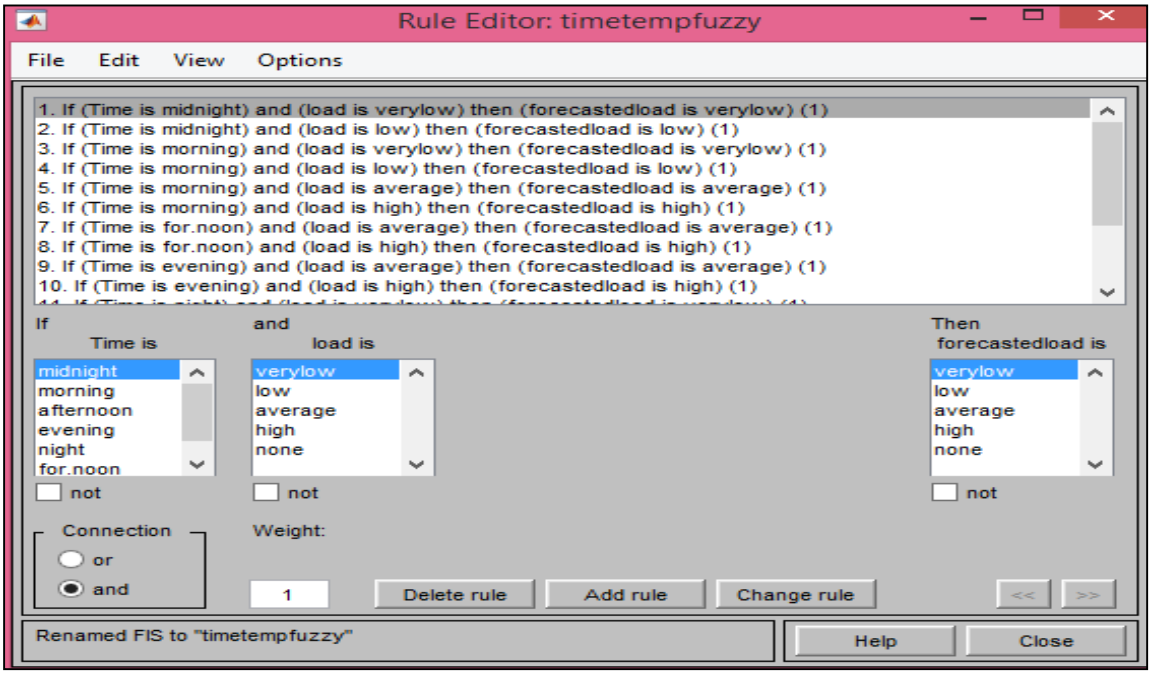

Fig. 7: Fuzzy Rule Base

V. SIMULATION RESULT

Fuzzy logic simulation for short term load forecasting is shown in Fig. 8. The software used for the simulation work is MATLAB. The actual load data and input data are taken from the workspace file and then put in the simulation diagram as shown in figure. The input data is given to the fuzzy logic controller block. ".fis" of fuzzy inference system is put in the fuzzy logic controller block. The fuzzy rules prepared in the fuzzy logic controller block gives the forecasted output.

VI. RESULTS

The membership function acted by the inference engine is aggregate of all the fuzzy inference system output. The Fig. 9. Shows rule viewer of one sample data of forecasted output. Table 1 shows the actual load data, forecasted load data and percentage error of 24 hour. The percentage error can be calculated as:

$$\% \text{ Error} = \frac{\text{Actual load} - \text{Forecasted load}}{\text{Actual load}}.100 \qquad (3)$$

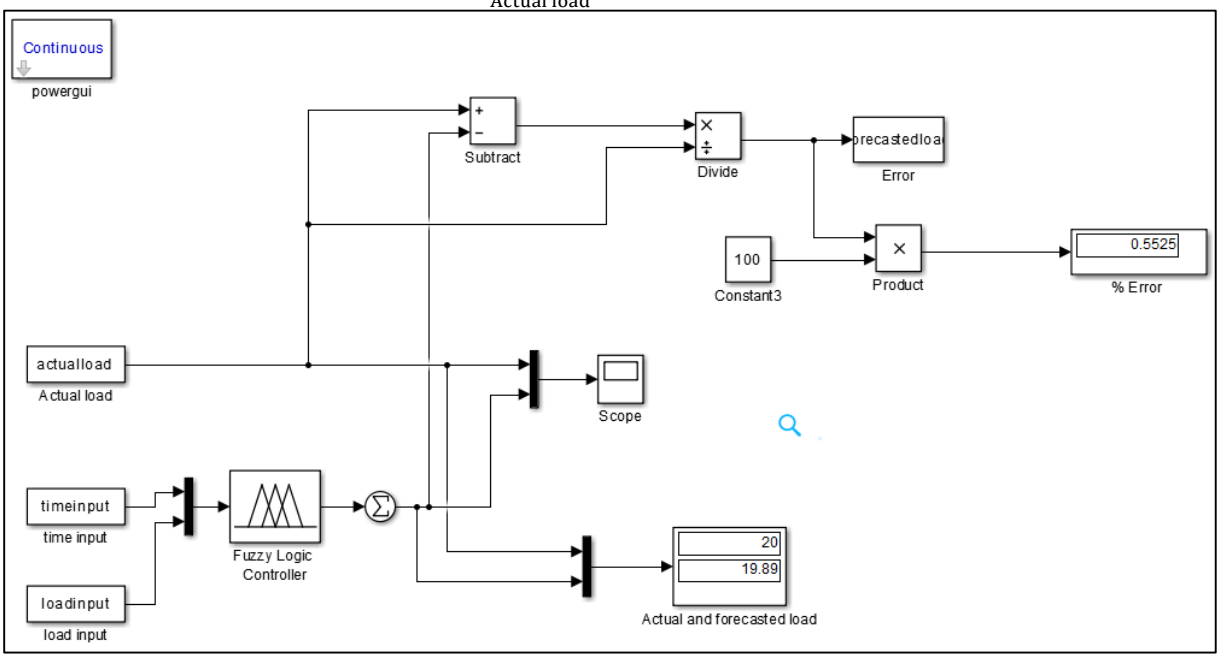

Fig. 8: Fuzzy logic simulation of short term load forecasting

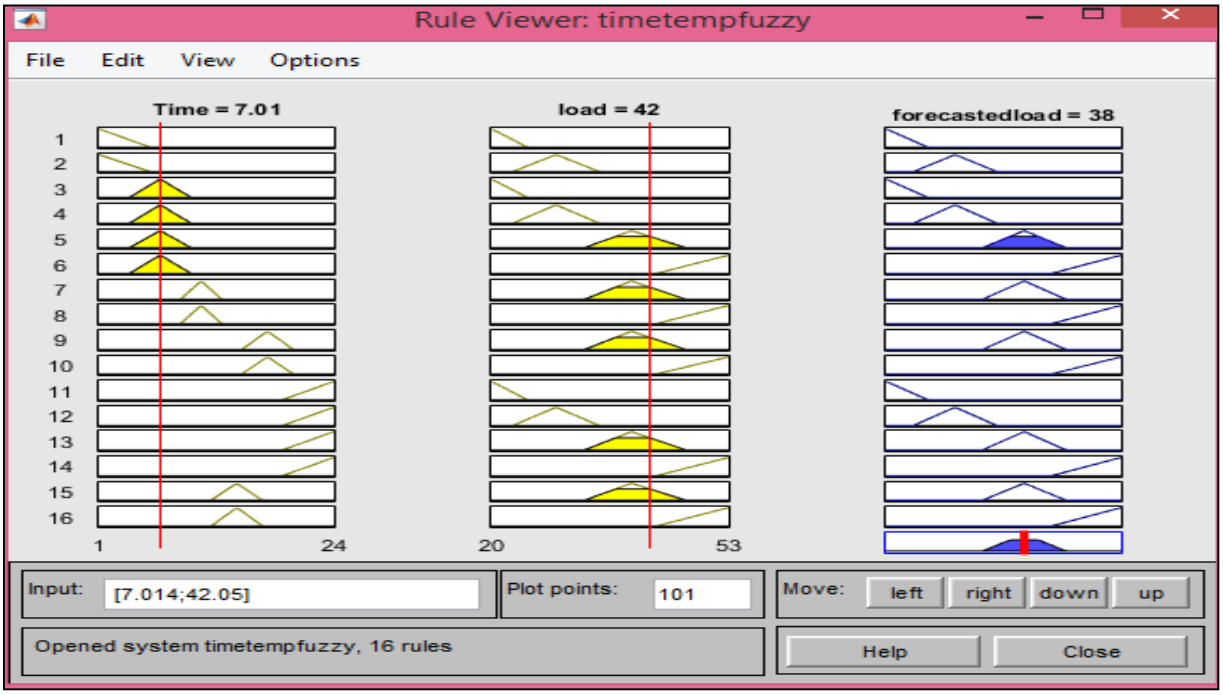

Fig. 9: Rule viewer of one sample data

The error is between +3.67% and -3.75%. This error comes from the result obtained from the fuzzy logic and this fuzzy logic result is compared with the conventional method of short term load forecasting.

Table 1: Forecasted load and percentage error for the 24 hour

TIME	*LOAD*	*ACTUAL LOAD*	*FORECASTED LOAD*	*APE%*
1	*20*	*20*	*19.9*	*0.5*
2	*20*	*20*	*20*	*0*
3	*20*	*18*	*18.2*	*-1.11*
4	*26*	*20*	*19.7*	*1.5*
5	*31*	*24*	*23.5*	*2.08*
6	*34*	*29*	*29.5*	*-1.72*
7	*42*	*37*	*38*	*-2.70*
8	*53*	*45*	*44*	*2.22*
9	*49*	*52*	*51*	*1.92*
10	*48*	*51*	*50*	*1.96*
11	*46*	*50*	*49*	*2*
12	*46*	*48*	*49*	*-2.08*
13	*44*	*47*	*46.1*	*1.91*
14	*43*	*43*	*41.7*	*3.02*
15	*42*	*42*	*40.5*	*3.57*
16	*45*	*40*	*41.5*	*-3.75*
17	*47*	*48*	*48*	*0*
18	*53*	*51*	*49.5*	*2.94*
19	*46*	*49*	*47.2*	*3.67*
20	*39*	*43*	*41.5*	*3.48*
21	*37*	*40*	*39*	*2.5*
22	*32*	*32*	*33*	*-3.12*
23	*24*	*25*	*25.5*	*-2*
24	*22*	*21*	*20.5*	*2.38*

VII. CONCLUSION

In this paper the author discuss about the short term load forecasting methodology using fuzzy logic. For the unit commitment, security analysis of generation short term load forecasting is very useful tool. It is observed that using input data and by making rule base the load forecasting is done and its error margin is +3.67% and -3.75%. The fuzzy logic tool box is easy to understand because it works on If-Then rule. The error can be reduced if the data is large and accurate and the error can be reduced by making the membership function as many as possible.

REFERENCES

[1] Idil Isikli Esener, Togna Yukksel, Mehmet kurban, Short term load forecasting without metrological data using AI-based structures, Turk. J. Electr. Eng. Comput. Sci. (February 2015) 370-380.
[2] J. Choong, Powerful Forecasting with MS Excel, 2012, pp. 1-257.
[3] Al-Kandari A, Soliman S, El-Hawary M (2004) Fuzzy short-term electric load forecasting. Int J Electr Power Energy Syst 26(2):111-122.
[4] Feinberg EA, Genethliou D (2005) Load forecasting. Applied mathematics for restructured electric power systems, chap 12. Springer, New York, pp 269-285.
[5] Fan S, Hyndman RJ (2012) Short-term load forecasting based on a semi-parametric additive model. Power Syst IEEE Trans 27(1):134-141.
[6] Li-Xin Wang and Jerry M. Mendel,"Generating Fuzzy Rules by Learning from Examples" 1991 IEEE international Symposium.
[7] Engr. Badar Ul Islam, Head of Department Computer Science & Engineering, NFC-Institute of Engineering & Fertilizer Research, Faisalabad – Pakistan, "Comparison of Conventional and Modern Load Forecasting Techniques Based on Artificial Intelligence and Expert Systems", IJCSI International Journal of Computer Science Issues, Vol. 8, Issue 5, No 3, September 2011.
[8] Su, Yuan-Yih, and Chien-Chuen Yang. "Design of artificial neural networks for short-term load forecasting. Part 1: Self-organising feature maps for day type identification." In IEE Proceedings C (Generation, Transmission and Distribution), vol. 138, no. 5, pp. 407-413. IET Digital Library, 1991.E.
[9] D K Ranaweera, N F Hubele and & G G Karady, "Fuzzy logic for short term load forecasting", IEEE Electrical Power & Energy Systems Vol. 18 No. 4, pp. 215-222, 1996.
[10] Wang Feng Yu Er Keng Liu Yong Qi Liu Jun Yan Chen Shan, "Short-term Load Forecasting Based On Weather Information" IEEE 1997.