An Intelligent Helmet for Miners with Air Quality and Destructive Event Detection using Zigbee

Dr. B. Paulchamy
Professor & Head
Department of Electronic and Communication Engineering
Hindusthan Institute of Technology, Coimbatore

Dr. C. Natarajan
Principal
Department of Electronic and Communication Engineering
Hindusthan Institute of Technology, Coimbatore

A. Abdul Wahith
UG Student
Department of Electronic and Communication Engineering
Hindusthan Institute of Technology, Coimbatore

P. V. Madhu Sharan
UG Student
Department of Electronic and Communication Engineering
Hindusthan Institute of Technology, Coimbatore

R. Hari Vignesh
UG Student
Department of Electronic and Communication Engineering
Hindusthan Institute of Technology, Coimbatore

Abstract

An intelligent helmet has been developed to assist the miners working in the mining industry. Harmful events tend to occur in the mining industry that can lead to severe injury or be fatal. LED miner's helmet is the most commonly used helmet because of light weight and low power consumption. However it does not improve the safety of miners apart from providing illumination. Zigbee wireless sensor networks are used to collect sensor data and transmit them. The zigbee based system is cost effective and details are shared with central control unit. This paper presents a study of the mining environment and its hazards and how a zigbee is used for transmission from miner to ground control system in case of hazardous events.
Keywords- Miners, Safety, Sensors, Wireless Network, Air Quality

I. INTRODUCTION

Mining is the process of extracting valuable minerals from the earth. It plays an important role in today's world due to need for metals and other materials caused by rapid urbanization and industrialization. India is a land with many natural reserves of mineral and valuable rocks .Underground mining, surface mining, high wall mining, quarrying are some of the mining techniques used in the country. There are about 11 coal mines, 13 iron ore mines, 9 bauxite (aluminum ore) mines, 5 manganese mines, 5 copper mines, 3 diamond mines and 2 gold mines in India. The mining industry there is a high safety risk due to problems like mine ventilation, danger from hazardous gases, incidents like rock fall and head injuries. These are direct threat to the safety of miners. Some small incidents often occur in the mining industry but two major mining hazards that occurred in India lead us to think about the safety of miners more deeply. The Chasnala mining disaster killing 372 miners and the Jharkhand coal mine incident that killed 11 miners and trapped over 50.Thus a safety device is necessary to protect miners and rescue them even in case of such incidents. Sensors can be used to detect the changes in the environment that affect safety of miners and communicate them with the ground center. Under the mines, due to the labyrinth of tunnels it is inconvenient to use wired communication system. The installation and maintenance cost are also high. Also during problems like fire, rock fall, explosion conventional wired communication system is unreliable, so we require a wireless sensor network. A mining helmet could be modified to increase the safety of miner by adding technology to the helmet. A sensor circuit placed in the helmet of each miner will observe the environment changes and transmit them to central control unit at radio frequencies. The factors considered during the development of this safety helmet are helmet removal, exposure to hazardous gases and miners being hit by an object. The helmet removal is the first event considered where a miner has removed or neglected wearing a helmet. An IR sensor used in this helmet identifies if the helmet is on the miner's head or not.

The second event is the exposure to gases (air quality) where miners are exposed to harmful gases like carbon-di-oxide, methane, sulfur-di-oxide during mining. A range of sensors are used to measure the air quality. Collision detection is considered as the third event. This occurs when the miner is hit in the head by an object at a force that can lead to injury.

A vibration sensor was used to measure the force causing the vibration of the head with which the HIC (Head injury criteria) was calculated. A temperature sensor is also added because in case of any event there in a sudden change in temperature.

It is advantageous to use zigbee based wireless sensor network due to its remote environment monitoring capability. This is a cost effective, real time surveillance system with portability and accuracy that can avoid safety problems by early warning.

II. LITERATURE SURVEY

The mining industry mostly uses cables and wired network to communicate with the ground center. In mines, if an accident happens, the sensors and cables were usually damaged fatally by the explosion, and so we couldn't provide information for rescue search and detection events. We used wireless sensor network to communicate at times of such accidents and to detect a number of activities like helmet removal, collision detection and air quality measurement by using PIC microcontroller. For our paper, we observed from different reference papers developed by researches.

Michael Zuba, Carlos Villa, Alexandria Byrd proposed about an Autonomous Coalmine System (AUV) networks are becoming increasingly popular in scientific, commercial, and military applications. In undersea exploration and environmental monitoring AUVs are used for tasks such as detection of oilfields and marine life, distributed tactical surveillance for offshore and seaport defense and mine reconnaissance. AUV networks are also becoming an important interest in an effort to enhance the capabilities of coalmine sensor networks (UWSNs). In this paper we propose a control system for networked autonomous coalmine systems that includes both hardware and software modules.

Burke, S.E. and Rosenstrach proposed a novel sonar sensor is described which utilizes two coincident, distributed, shaded methane sensor and co2 sensors to provide high resolution target bearing estimates. Sensor shading is accomplished by suitably shaping the charge collection electrodes deposited on the sensing layer. When these two sensor shadings are matched via a derivative in space, the ratio of their signal outputs is linearly proportional to the direction cosine of an incident acoustic field; it is an extension of the well-known monopulse concept.

C. J. Behr, A. Kumar and G.P. Hancke proposed "A Smart Helmet for Air Quality and Hazardous Event Detection for Mining Industry "has been developed that is able to detect of hazardous events in the mines industry. In this paper, no collision detection and helmet removal scheme is used.

III. EXTRACTING KNOWLEDGE FROM EXISTING METHODOLOGY

Previously many authors have invented various methods for coalmine mobile zigbee system. When the disadvantage of one method is solved by new method, the new method has its own drawback. Some previous methods of autonomous coalmine systems are discussed here. Thus in existing method it consists of an inbuilt mining light to enable the miners to work in the dark environment. Some of the existing system use air quality measurement alone. In case of hazardous gases detected the miners are evacuated and are provided with safety equipment like masks to protect them. Some others systems use humidity and temperature measurement of the surroundings to ensure more safety. However the disadvantage of the existing systems is that it does not use crash detection or helmet removal alerts which are also serious safety problems in mining field.

IV. PROPOSED METHODOLOGY

This system is developed by using some sensor modules that measures real-time underground parameters like temperature, vibration and gas concentration. Gas concentration is meant for harmful gases like methane, propane butane and carbon-monoxide. The sensors available in the helmet collect the temperature and humidity information and sends the information to control unit. Low rate Zigbee is used for wireless data transmission. When the control center decides the parameters are abnormal then they can make a call to the coal miner through the same Zigbee module. A PIC Microcontroller is used with the sensors to receive the sensor outputs and to take the necessary decision. In recent years, harvesting technology has been played an important role in the area of mine application. The literature on mines technology is available but very limited.

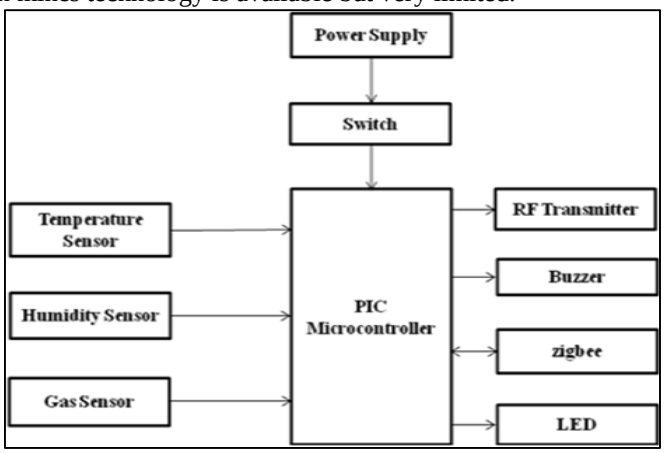

Fig. 1: Block Diagram of Helmet Unit

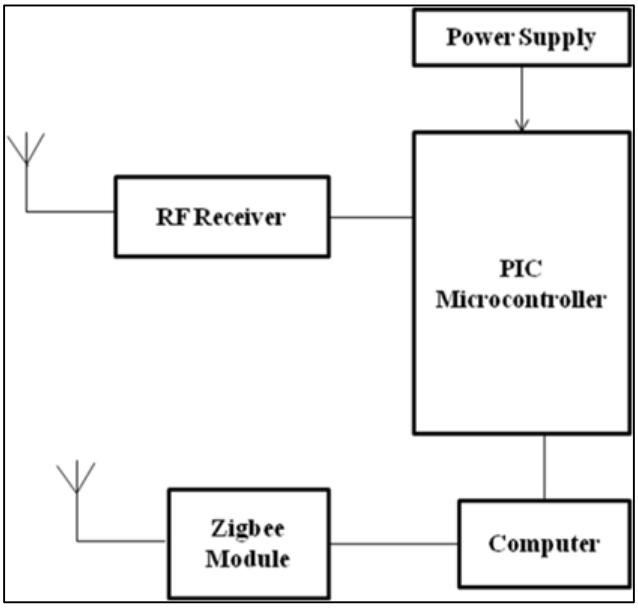

Fig. 2: Block Diagram of Receiving Unit

V. WORKING DESCRIPTION

A. Gas Sensor

Air pollution from coal miners is mainly due to emissions of particulate matter and gases include methane (CH_4), sulphur-dioxide ($S0_2$), and oxides of nitrogen (NO_2), and carbon monoxide (CO). From different study, it is well known that if human being comes in contact with these chemical pollutants it could have adverse effect on their health. These unbalanced ratios of air pollution gases such as suspended particulate matter increases respiratory diseases like asthma, chronic bronchitis, and cardiovascular problems.

Fig. 3: Gas Sensor

B. Temperature Sensor

Temperature can be measured via a diverse array of sensors. All of them infer temperature by sensing some change in a physical characteristic.

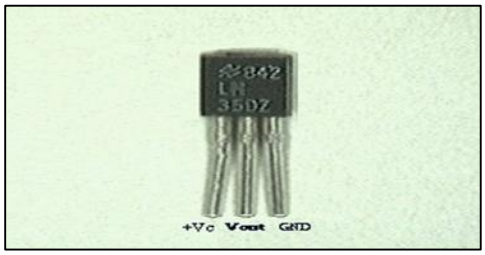

Fig. 4: Temperature Sensor

C. Humidity Sensor

The DHD-22(also named as AM2302) is a digital output, relative humidity and temperature sensor. Capacitive humidity sensor and a thermistor are uses to measure the surrounding air, and a sends a digital signal on the data pin.

In this example, you will learn how to use the sensor with arduino UNO. The room temperature and humidity will be printed to the serial monitor.

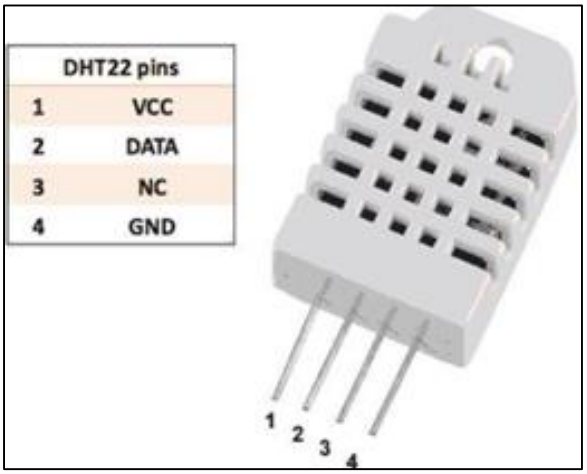

Fig. 5: Humidity Sensor

VI. PROCESS FLOW

The following flowchart shows how the process takes place in the system.

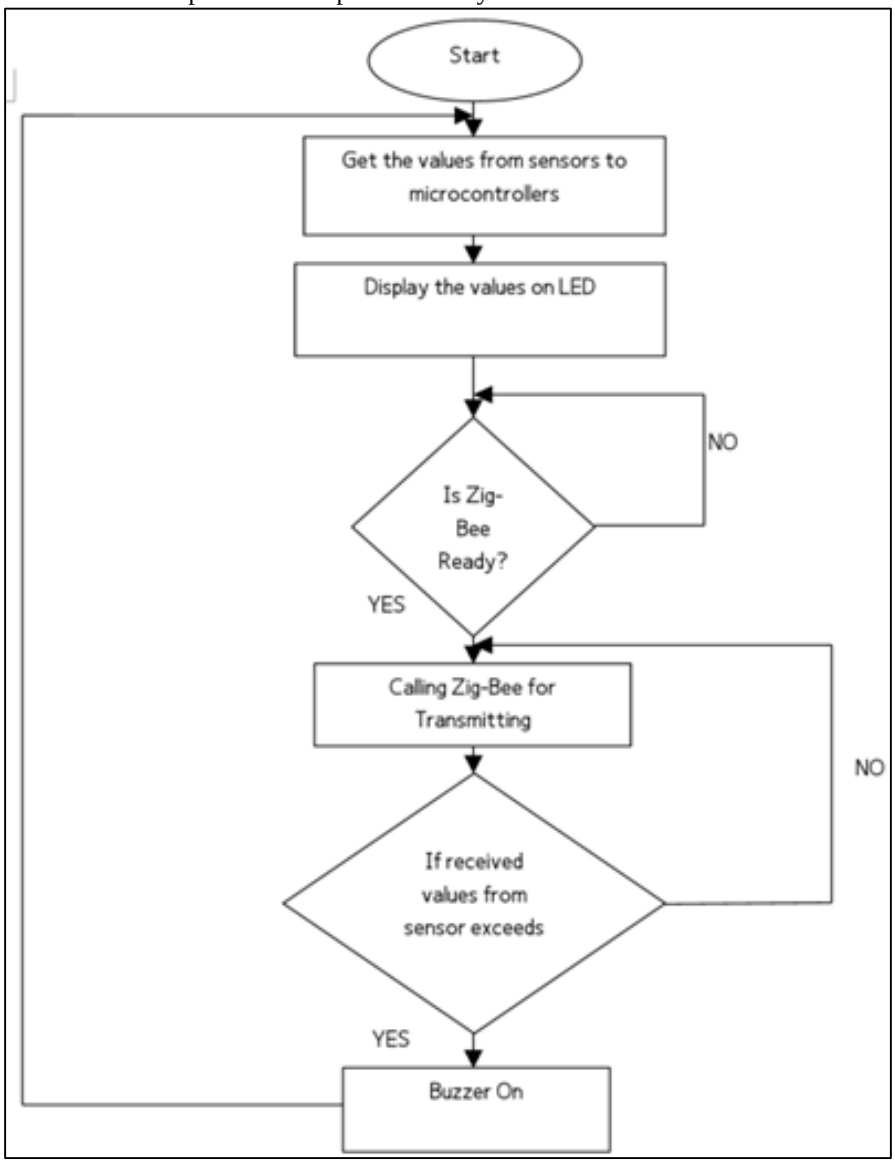

Fig. 6: Flow Chart of Transmitter

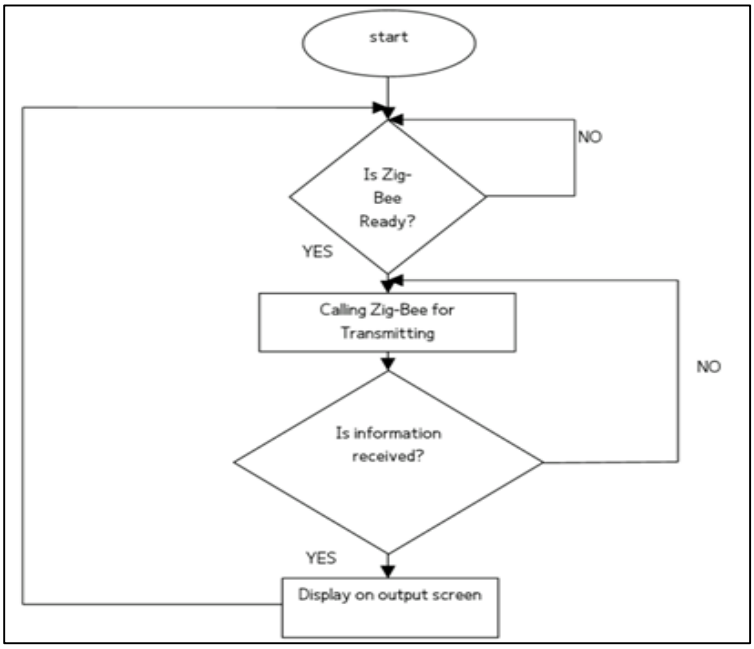

Fig. 7: Flow Chart of Receiver

VII. RESULTS AND DISCUSSION

By implementing this paper, the temperature, vibration and gas values of the coalmine are continuously monitored at the underground and ground sections and stored in the PC. The numbers of personnel working inside the coalmine are also monitored. There include the helmet removal and collision detection. On detection of hazardous events a message is send to the nearby workers and the managers.

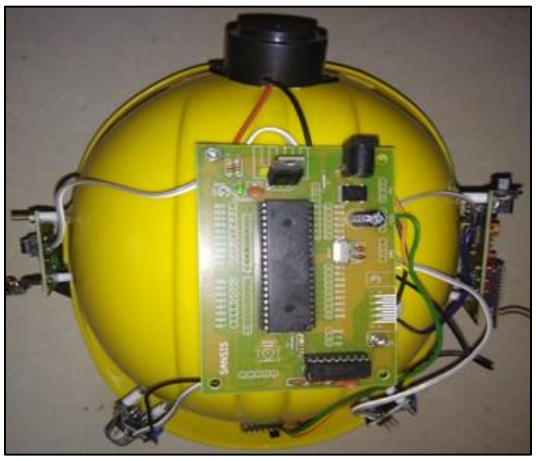

Fig. 8: Snap Shot of Our Designed Module

Fig. 9: Receiver Unit

VIII. CONCLUSION

Thus, the paper here presented covers all the hardware components and software requirements. Thus the paper has been successfully presented and tested with integrated feature of each hardware component for its development. Significance of each block has been placed carefully, and thus contributing to the best working of the unit. Hence the system is reliable with simple and easily available components, making it light weight and portable. The Zigbee based an intelligent helmet for miners with air quality and destructive event detection is low cost.

ACKNOWLEDGEMENT

This project work was fully financial supported by The Institution of Engineers (India), Kolkata. So we express our sincere thanks to IEI R&D for providing financial support to complete this project in Successful manner.

REFERENCES

[1] C.J. Behr, A. Kumar and G.P. Hancke ―A Smart Helmet for Air Quality and Hazardous Event Detection for Mining Industry‖, Department of Electrical, Electronic and Computer Engineering University of Pretoria, South Africa gerhard.hancke@up.ac.za .
[2] C. Qiang, S. J. Ping, Z. Zhe, Z. Fan, ―ZigBee Based Intelligent Helmet for Coal Miners, Proc. IEEE World Congress on Computer Science and Information Engineering, pp. 433-35, 2009.
[3] Tanmoy Maity, Partha Sarathi Das, Mithu Mukherjee ―A Wireless Surveillance and Safety System for Mine Workers based on Zigbee.
[4] S. Wei, L. Li-li, ―Multi-parameter Monitoring System for Coal Mine based on Wireless Sensor Network Technology, Proc. International IEEE Conference on Industrial Mechatronics and Automation, pp 225-27, 2009.
[5] Rajkumar boddu, p.balanagu ―zigbee based mine safety monitoring system with gsm International Journal of Computer & Communication Technology, Volume-3, Issue-5, 2012.
[6] M.A. Hermanus, ―Occupational health and safety in mining status, new developments, and concerns‖, The Journal of The Southern African Institute of Mining and Metallurgy, vol. 107, p. 531-538, Aug 2007.
[7] R. S. Nutter, ―A distributed microprocessor monitoring and control system for coal mines,‖ in Proc. 4th WVU Conf. on Coal Mine Electro technology, Aug. 2-4, 1978.
[8] R. S. Nutter, ―Hazard evaluation methodology for computer-controlled mine monitoring/control systems,‖ IEEE Trans. on Industry Applications, vol. IA-19, no. 3, pp. 445-449, May/June 1983.
[9] R. S. Nutter and M. D. Aldridge, ―Status of mine monitoring and communications,‖ IEEE Trans. on Industry Applications, vol. 24, no. 5, pp. 820-826, Sep./Oct. 1998.
[10] A. D. Kock and J. W. Oberholzer, ―The development and application of electronic technology to increase health, safety, and productivity in the South African coal mining industry,‖ IEEE Trans. on Industry Applications, vol. 33, no. 1, pp. 100-105, Jan/Feb. 1997.
[11] P. Misra, S. Kanhere, D. Ostry and S. Jha, ―Safety assurance and rescue communication systems in high-stress environments: a mining case study‖, IEEE Communications Magazine, vol. 48, no. 4, pp. 66-73, April 2010.
[12] A. E. Forooshani, S. Bashir, D. G. Michelson and S. Noghanian, ―A survey of wireless communications and propagation modelling in underground mines‖, IEEE Communications Surveys and Tutorials, vol. 15, no. 4, pp. 1524-1545, Nov. 2013.
[13] C. P. Kruger and G. P. Hancke, ―Implementing the Internet of Things vision in industrial wireless sensor networks,‖ IEEE Int. Conf. on Industrial Informatics, pp. 627-632, July 2014.
[14] D. M. Han and J. H. Lim, ―Smart home energy management system using IEEE 802.15.4 and ZigBee,‖ IEEE Trans. on Consumer Electronics, vol. 56, no. 3, pp. 1403-1410, Aug. 2010.
[15] C. P. Kruger and G. P. Hancke, ―Benchmarking Internet Of Things devices,‖ IEEE Int. Conf. on Industrial Informatics, pp. 611-616, July 2014.
[16] K. Gill, S. H. Yang, F. Yao and X. Lu, ―A ZigBee-based home automation system,‖ IEEE Trans. on Consumer Electronics, vol. 55, no. 2, pp. 422-430, May 2009.
[17] J. Byun and S. Park, ―Development of a self-adapting intelligent system for building energy-saving and context-aware smart services,‖ IEEE Trans. on Consumer Electronics, vol. 57, no. 1, pp. 90-98, 2011.
[18] I. F. Akyildiz, W. Su, Y. Sankarasubramaniam, and E. Cayirci, ―Wireless sensor networks: a survey,‖ Computer Networks, vol. 38, pp. 393-422, 2002.
[19] V. C. Gungor and G. P. Hancke, Industrial Wireless Sensor Networks: Applications, Protocols, and Standards, Published by CRC Press, 2013.
[20] ZigBee Alliance, "Zigbee wireless standards‖. www.didgi.com/ technology/rf-articles/wireless-zigbee.
[21] B. Silva, A. Kumar and G. P. Hancke, ―Experimental Link Quality Characterization of Wireless Sensor Networks for Underground Monitoring,‖ IEEE Trans. on Industrial Informatics, vol. 11, no. 5, pp. 1099-1110, Oct. 2015.
[22] R. Fisher, L. Ledwaba, G.P. Hancke and C. Kruger. ―Open Hardware: A Role to Play in Wireless Sensor Networks,‖ Sensors, vol.15, no. 3, pp. 6818-6844, 2015.
[23] AM Abu-Mahfouz and G.P. Hancke. -An efficient distributed localisation algorithm for wireless sensor networks: based on smart reference-selection method‖, International Journal of Sensor Networks, vol. 13, no. 2, pp. 94-111, May 2013.