Intelligent Energy Management System using AC Microgrid for Renewable Energy Integration

T. Vignesh
Assistant Professor
Department of EEE
Jay Shri Ram Group of Institutions

E. Sampath Kumar
UG Scholar
Department of EEE
Jay Shri Ram Group of Institutions

P. Saravanan
UG Scholar
Department of EEE
Jay Shri Ram Group of Institutions

R. Sivasakthi
UG Scholars
Department of EEE
Jay Shri Ram Group of Institutions

E. Uthira Kumar
UG Scholar
Department of EEE
Jay Shri Ram Group of Institutions

Abstract

The intelligent energy management system is operated automatically to ON and OFF the generating sources as per the load demand. The renewable energy sources used in this energy management system are solar, wind, fuel cell and energy storage element battery as an input source. These renewable energy sources are integrated into the main dc bus through dc-ac converter. Microgrid is basically a group of large power grid. The renewable energy sources producing variable ac, variable dc and fixed dc. So, the converters in this are used to convert variable dc to fixed ac. The dc-ac converter is used for controlling the maximum amount of energy for the requirement of load demand. The Microgrid is operated in the real time and also for the load demand requirement. The ac microgrid is connected to the load for distribution. The Arduino is the microcontroller giving feedback to the inverters and converters.

Keywords- Wind, Solar, Fuel Cell, Microgrid, Arduino Controller, Converters and Battery

I. INTRODUCTION

The renewable energy sources solar, wind, fuel cell and energy storing element battery are the main components. The integrated sources are connected to the ac microgrid. Microgrid is that it can operate in standalone mode or main grid disconnection mode. These multiple different electric power supply generation resources have ability to isolate the microgrid from a large network and will provide highly reliable electric power.

The renewable energy sources connected to the bus through dc-ac converters. These sources are generated as per the load requirement. The generating dc current is converted into ac with the help of inverter and distributed to the home appliances. The Arduino is open-source hardware and in case of any load demand the Arduino processor send the signal to the converter. The energy management system is used to control and optimize the performance of generation or transmission system. The energy management used to consider the generation and consumption of energy cost. The distributed generation powered by fuel cell, wind and solar has gained popularity due to their higher operating efficiency.

II. COMPONENTS

A. PV Solar Panel

A photovoltaic (PV) system directly converts sunlight into electricity. The basic device of a PV system is the PV cell. Cells may be grouped to form panels or arrays. The voltage and current available at the terminals of a PV device may directly feed small loads such as lighting systems and dc motors. In a PV solar system, the modules, often called PV panels, are the power generating devices. For a large scale PV system a number of PV modules are connected in series to form a 'String', and these strings connect in parallel to form an 'Array'. However, the PV modules, or panels, are comprised of a number of PV cells also connected in series and shunt configuration. These PV cells are a formation of p-n junctions from the doping of p-type and n-type substrates that are able to produce DC current and DC junction voltage upon the incidence of light due to the photovoltaic effect on semiconductors. As a result of the series and shunt combination of the cells in a module, the PV module can be equally characterized with an increased level of current and voltage.

B. AC Voltage Controller

AC Voltage controller or AC Regulator is an electronic module based on either thyristors, TRIACs, SCRs, IGBTs, which converts a fixed voltage, fixed frequency alternating current (AC) electrical input supply to obtain variable voltage in output delivered to a resistive load. This varied voltage output is used for a dimming street lights, varying heating temperatures in homes or industries, speed control of fans and winding machines and many other applications, in a similar fashion to an autotransformer. Voltage controllers work either through "on and off control" or through "phase control".

C. AC Microgrid

AC microgrids with renewable energy sources are becoming more and more popular all over the world; they may contain various energy sources, such as wind and solar, and loads along with batteries for the energy storage. However, the random nature of renewable energy sources hinders the direct exploitation of their power generation capabilities The availability of an AC solution that preserves the loads from the power source fluctuations while reducing the converter count and partially or fully dispensing of storage devices could promote a large utilization of AC micro grid with renewable energy sources. Energy sources have been recently conceived as a technique able to balance power demand and generation automatically and they have been proven useful in stabilizing the magnitude of the ac Voltage by which renewable energy sources supply the loads.

D. Fuel Cell

A fuel cell is an electrochemical cell that converts the chemical energy from a fuel into electricity through an electrochemical reaction of hydrogen fuel with oxygen or another oxidizing agent. Fuel cell are different from batteries in requiring a continuous source of fuel and oxygen (usually from air) to sustain the chemical reaction, whereas in a battery the chemical energy comes from chemicals already present in the battery. Fuel cell can produce electricity continuous long for as long as fuel and oxygen are supplied.

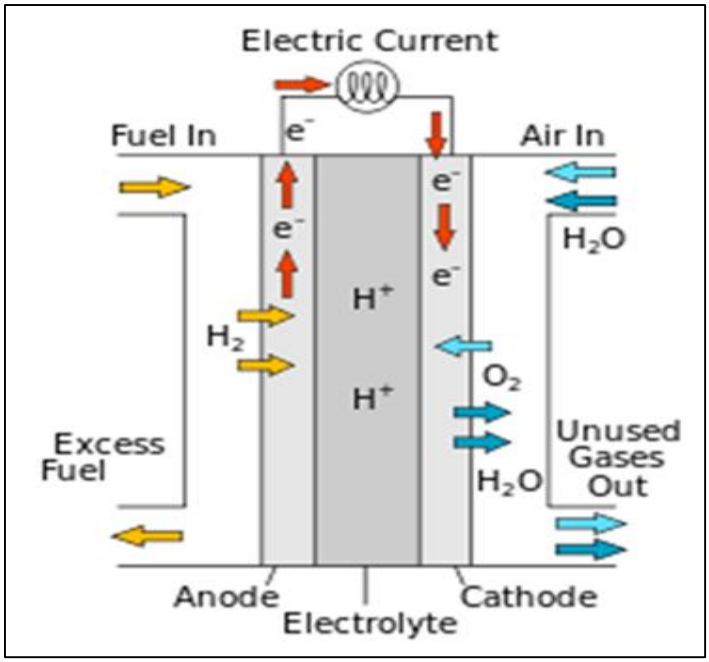

Fig. 1: Fuel cell

There are many types of fuel cells, but they all consist of an anode, a cathode and an electrolyte that allows positively charged hydrogen ions (protons) to move between the two sides of the fuel cell. At the anode catalyst causes the fuel to undergo oxidation reaction that generate protons (positively charged hydrogen ions) and electrons. . At the anode catalyst causes the fuel to undergo oxidation reaction that generate protons (positively charged hydrogen ions) and electrons.

E. Wind Energy

Wind generation of electricity places an unusual set of requirements on electrical system. Most applications for electrical drives are aimed at using electricity to produce torque, rather than using torque to produce electricity. The application that generate electricity from torque usually operate at a constant rated power. Wind turbines, on the other hand, must generate at all power levels and spend a substantial amount of time at low power levels. Unlike most electrical machines, wind generators must operate at the highest possible electrical efficiencies in the low power/low wind region to squeeze every kilo-watt hour out of the available energy.

F. Battery

An electrical battery is a device consisting of one or more electrochemical cells with external connections provided to power electrical devices. The output voltage of this battery is 12V. When a battery is supplying electric power, its positive terminal is the cathode and its negative terminal is the anode. The terminal marked negative is the source of electrons that when connected to an external circuit will flow and deliver energy to an external device.

G. Current Transformer

The current transformer is connected to the ac microgrid for step down the high voltage. The current transformer is also called instrument transformer, it produces a current in its secondary which is proportional to the current in its primary.

III. ENERGY IMPLEMENTATION

The Solar, Wind and Fuel Cell are the renewable energy sources used for generating electricity. The MPPT is Maximum Power Point Tracking connected to Solar panel to abstract the maximum available power from that source. It is connected to the inverter and then to the ac microgrid. The bi-directional converter is used between the battery and the ac Microgrid. The output voltage of ac Microgrid is 12V, it is connected to the current transformer. The current transformer is used to step down the voltage level and give it to the load.

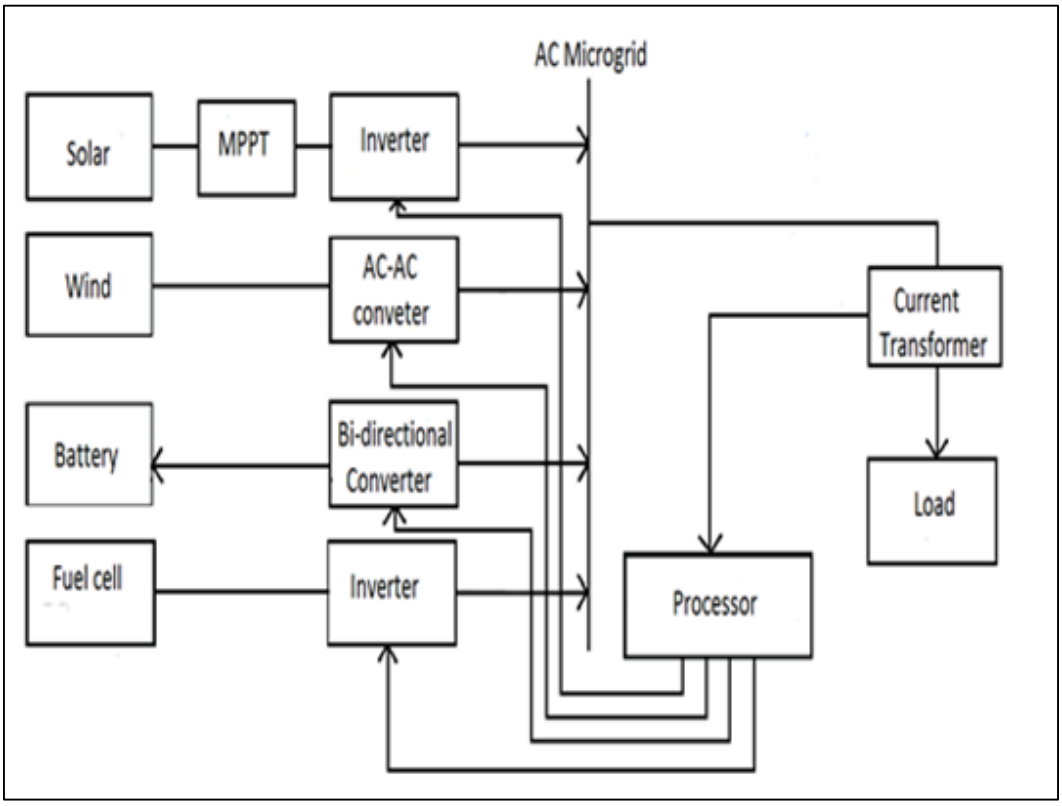

Fig. 2: Block Diagram

The current in the secondary winding of current transformer is proportional to the current in the primary circuit. All the energy sources are connected to the ac microgrid. The Arduino is the microcontroller directly taking feedback from current transformer and send it to the inverters and converters. Solar cells grouped in larger units to form PV modules, which are then interconnected in a parallel-series configuration to form PV arrays. The output voltage of the solar cell is a function of the photocurrent that depends on the solar irradiation level during its operation. The Wind energy generating ac is connected to the microgrid through the ac voltage controller. The fuel cell producing dc energy is converted into ac and connected to the ac microgrid. The wind energy generating ac is connected to the microgrid through the ac voltage controller. The fuel cell producing dc energy is converted into ac and connected to the ac microgrid. In this section, the real-time operation of the Microgrid is interconnected and autonomous mode is studied.

IV. INTEGRATION OF RENEWABLE ENERGY SYSTEM IN MICROGRID

The renewable energy sources are integrated and connected to the ac microgrid. Distributed generation can support weak grids, adding grid voltage and improving power quality. In certain circumstances, distributed generation can be used in conjunction with

capacitor banks for management of power flows or to manage active and reactive power balance. All the resources such as wind, solar energy, fuel cell and battery are integrated in the main grid. If harvested and taken care of control system, it can reduced dependencies on local or imported fuels and increased energy security due to distribution generation and share of all energy sources to the load and can reduce emission of greenhouse gases hazard for environment and it is free from pollution.

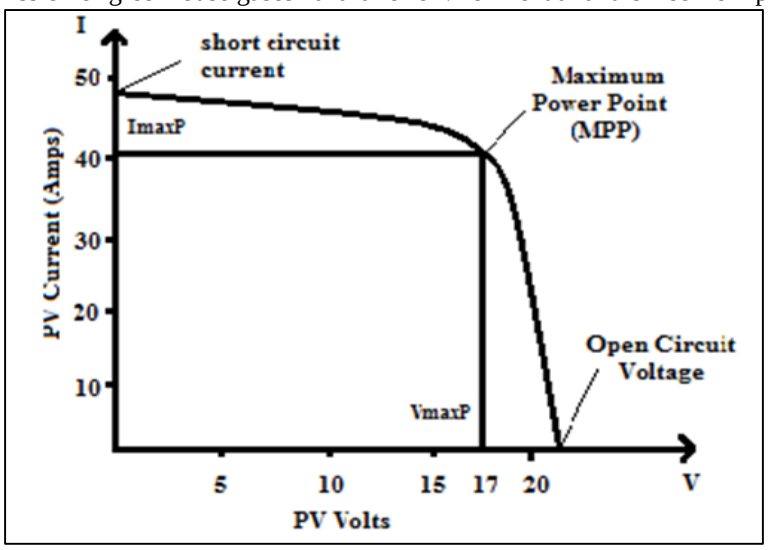

Fig. 3: Photovoltaic Array Voltage/Current Characteristic

This graph shows the photovoltaic array voltage (pv volts) and photovoltaic current (pv current) characteristics. The short circuit current occurs at the maximum current (ImaxP) and the open circuit voltage occurs at the maximum voltage (VmaxP). The point which coincides between the photovoltaic current and the photovoltaic voltage is the maximum power point which is used to get the maximum available power produced in the photovoltaic array.

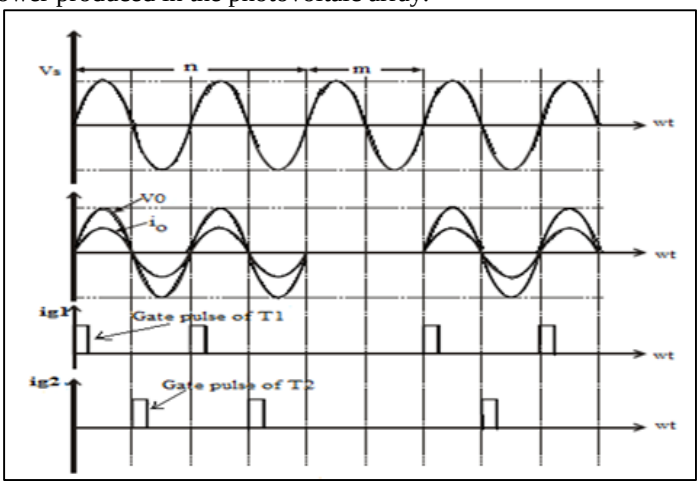

Fig. 4: wind voltage/current characteristics

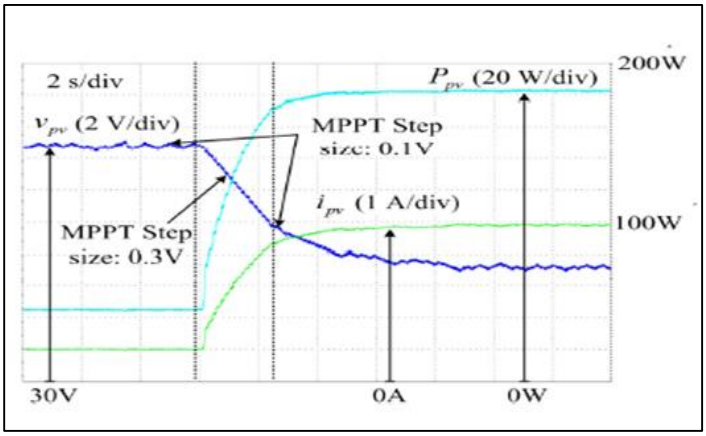

Fig. 5: MPPT Controller

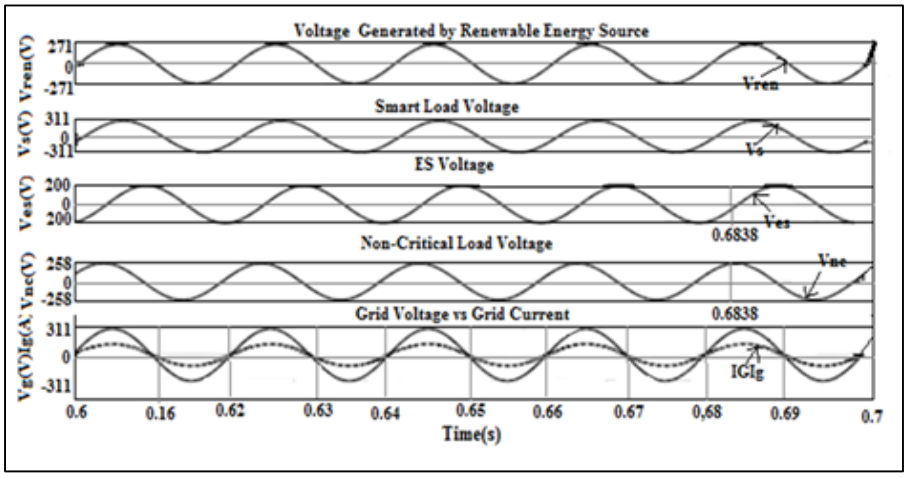

Fig. 6: Output characteristics

A. Materials Used

We have used 4 MOSFET (STP315N10F7) to invert the dc power output from the solar panel. The output of the inverter is connected to the 12V ac Microgrid and power is fed from the Microgrid to the current transformer (12V).

The output is connected to the 15W load (light). The wind energy is converted into electrical energy by using 12V dynamo and is converted into ac power output by using the inverter and connected to the 12V microgrid, which is fed to the load. Similarly the battery and fuel cell is also connected to the load.

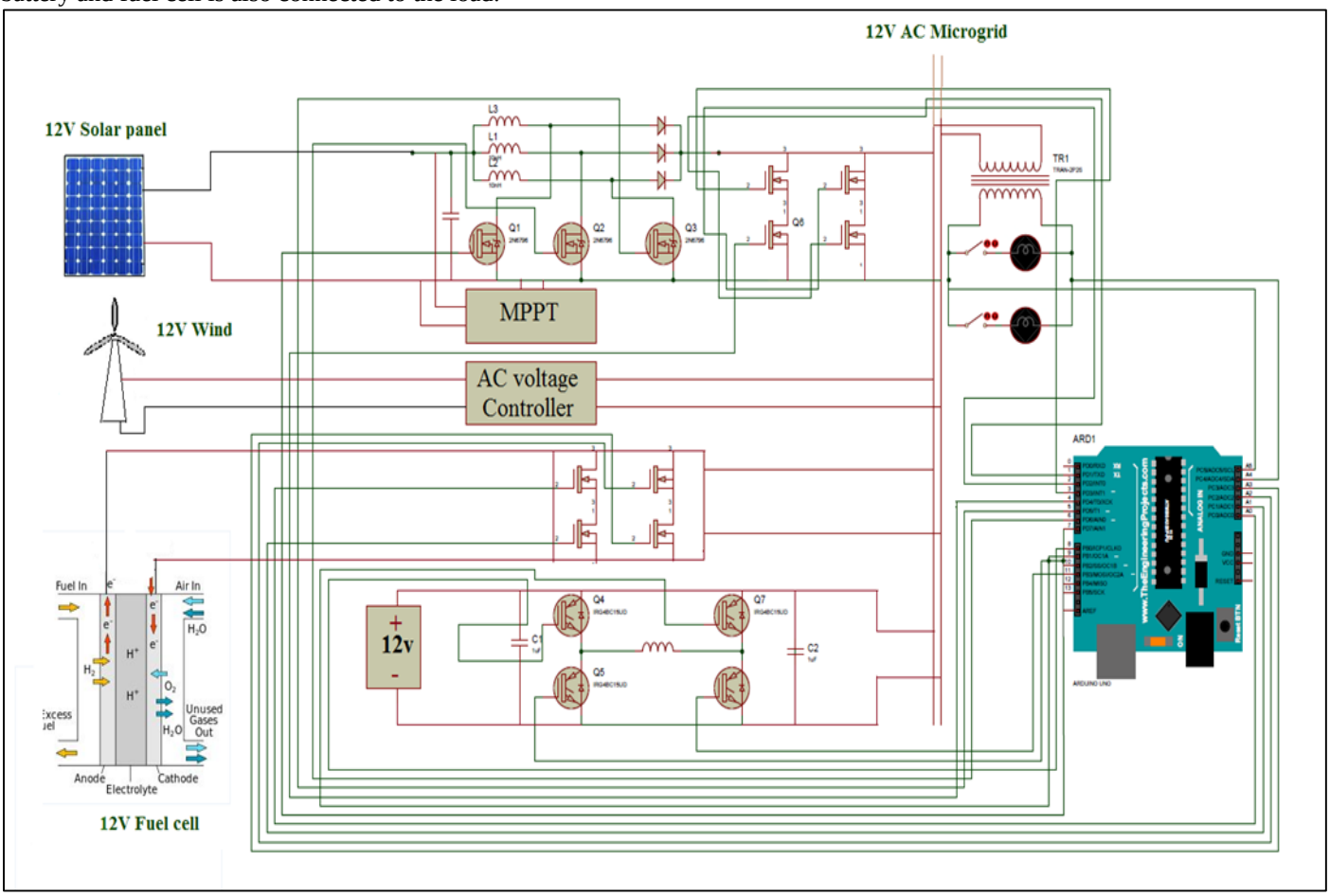

Fig. 7: Circuit Diagram

B. Result

Solar cells are grouped in larger units to form PV modules, which are then interconnected in a parallel-series configuration to form PV arrays. The output voltage of the solar cell is a function of the photocurrent that depends on the solar irradiation level during its operation. The output current of the solar cell is represented by equation (1). For the parallel branches, the PV voltage and

current are given by equations (2) and (3). The power output of the PV array is the product of output current and output voltage of PV, which is represented by equation (4).

$$IC=Iph-I0=Iph-Isat[\ eq/AKTc(V+IRs)-1\ ] \quad (1)$$

$$Vpv=NS\times(Vref-\beta(T-Tref)-Rs(T-Tref)) \quad (2)$$

$$Ipv=Np\times(Iref+\alpha(G/1000)(T-Tref)+(G/1000-1)Isc) \quad (3)$$

$$Ppv=Ipv\times Vpv \quad (4)$$

Where,
Iph- Light generated current in a solar cell
Io – Reverse saturation current of diode
Tc- Cell temperature in kelvin
A-Ideality factor
K- Boltzman constant
q- Electron charge
α- Current temperature coefficient
β- Voltage temperature connected in series
G- Irradiance
Ns- Number of modules connected in series
Np- Number of modules connected in parallel

V. CONCLUSION

An ac Microgrid for renewable power integration has been proposed. Microgrid uses alternative power systems to support these load points such as solar power, wind power and fuel cell. The demand of energy generation worldwide grows raidly, because energy generation is Low but energy Consumption is on a high rate. Interaction with the main grid was controlled as a result of an operational optimization that seeks to minimize cost and emissions. A method to quantify the uncertainty affiliated with the forecast of aggregated wind and PV-based power generation was created and used to quantify the energy reserve of the battery energy storage system. The battery is parallel-connected with a super capacitor to form a multilevel energy storage. Electricity companies cannot satisfy consumers with this electricity generation rate for production and must use renewable rate for production and must use renewable energy system by using microgrid technology. The control strategy is based on combined power control and voltage control schemes to control the voltage source inverters.

REFERENCE

[1] A.A.Salam, A.Mohamed, M.A.Hannan, Department of Electrical, Electronic and Systems Engineering, “Improved Control Strategy for Fuel Cell and Photovoltaic Inverters in a Microgrid”, ISSn: 1790-5060.Issue:10, Volume 4, October 2009.pg.No:331-340.
[2] Kai Strunz, Ehsan Abbasi, and Duc Nguyen Huu, “DC Microgrid for Wind and Solar Power Integration”, IEEE Journal of Engineering and Selected Topics in Power Electronics, Vol.2, No:1, March 2014.Pg.No:115-126.
[3] M.Anantha Kumar, “Integration and Distribution of Renewable Sources in DC Microgrid with Energy Storage System” International Journal of Innovative Research in Science, Engineering and Technology, Volume 3, Special Issue 3, March 2014.P.No:2713-2718.
[4] Manzoa Ahmed, Uzma Amin. Suhail Aftab, Zaki Ahmed, “Integration of Renewable Energy Resources in Microgrid”, Energy and Power Engineering, 2015, pg:12-29.
[5] A. L. Dimeas and N. D. Hatziargyriou, “Operation of a multiagent system for microgrid control”, IEEE Trans. Power Syst., vol. 20, no. 3, pp. 1447–1455, Aug. 2005.
[6] Katiraei and M. R. Iravani, “Power management strategies for a microgrid with multiple distributed generation units”, IEEE Trans. Power Syst., vol. 21, no. 4, pp. 1821–1831, Nov. 2006.
[7] D.Westermann, S. Nicolai, and P. Bretschneider, “Energy management for distribution networks with storage systems—A hierarchical approach”, in Proc. IEEE PES General Meeting, Convers. Del. Electr. Energy 21st Century, Pittsburgh, PA, USA, Jul. 2008.
[8] R.Lasseter, A.Akhil, C.Marnay, Integration of Distributed Energy Resources, the CERTS Microgrid Concept, LBNL-50829, Lawrence Berkeley National Laboratory, 2002.
[9] H. H. Zeineldin, E. F. El-Saadany, and M. M.A.Salama, Impact of DG Interface Control on Islanding Detection and Non-detection zones, IEEE Transactions on Power Delivery, Vol. 21,No. 3, 2006, pp. 1515-1523.
[10] K. Sung-Hun, S. R. Lee, H. Dehbonei et al., Application of Voltage and Current-controlled Voltage Source Inverters for Distributed Generation Systems, IEEE Transaction on Energy Conversion, Vol. 21, No. 3, 2006, pp. 782-792.
[11] H. Tao, A. Kotsopoulos, J.L. Duarte, and M.A.M. Hendrix, “Multi-input bidirectional dc-dc converter combining dc-link and magnetic-coupling for fuel cell systems,” in Proc. IEEE IAS, Hong Kong,
[12] China, Vol.3, Oct.2005, pp.2021-2028.
[13] S.Sikkabut, N.H.Fuengwarodsakul, P.Sethakul, P.Thounthong, S.Pierfederici, M.Hinaje, B.Nahid-Mobarakeh, B.Davat, ”Control strategy of solar/wind energy power plant with supercapacitor energy storage for smart DC microgrid", Power Electronics and Drive Systems (PEDS), 2013 IEEE 10th International Conference vol., no., pp.1213,1218, 22-25 April 2013.
[14] M. R. Patel, Wind and Solar Power Systems. Boca Raton, FL: CRC Press, 1999.
[15] C. Yaow-Ming, L. Yuan-Chuan, H. Shih-Chieh, and C. Chung- Sheng, “Multi-input inverter for grid-connected hybrid PV/Wind power system,” IEEE Trans. Power Electron., vol. 22, no. 3, pp. 1070–1077, May 2007.
[16] R. Palma-Behnke, C. Benavides, F. Lanas, B. Severino, L. Reyes, J. Llanos, et al., “A microgrid energy management system based on the rolling horizon strategy,” IEEE Trans. Smart Grid, vol. 4, no. 2, pp. 996–1006, Jun. 2013.