Computational Analysis of Pulmonary Artery Stenosis

G Lavanya
Assistant Professor
Department of Biomedical Engineering
Sri Ramakrishna Engineering College, Coimbatore

R Rajeshwari
Assistant Professor
Department of Biomedical Engineering
Sri Ramakrishna Engineering College, Coimbatore

Mahalakshmi V
Student
Department of Biomedical Engineering
Sri Ramakrishna Engineering College, Coimbatore

Srinithi V
Student
Department of Biomedical Engineering
Sri Ramakrishna Engineering College, Coimbatore

Nivetha M
Student
Department of Biomedical Engineering
Sri Ramakrishna Engineering College, Coimbatore

Abstract

The atrocious food habit and modern life style stimulate the prevalence of stenosis. Stenosis of pulmonary artery branches is an anomaly characterized by narrowed segments of one or more of the main or peripheral branches of the pulmonary artery. This narrowing may force the heart to pump harder, leading to enlarged heart and high blood pressure in the right ventricle and it results in heart failure and lung related disease like chronic obstructive pulmonary disease. To analyze deviations in pressure and velocity in blood flow, the artificial 3D model of different stages of stenotic condition in pulmonary artery is to be created using ANSYS 15 (Autodesk Inventor Software). Through this analysis certain range of pressure and velocity is obtained. This value helps in understanding the treatments suitable for desired stenosis condition.

Keywords- Pulmonary Artery, Stenosis, Chronic Obstructive Pulmonary Diseases, Pressure, Velocity, Blood Flow, ANSYS

I. INTRODUCTION

The heart is the major organ that helps to supply the blood and oxygen to all parts of the body. It is divided into two halves as atrium (upper part of heart) and ventricle (lower part of the heart). From the right ventricle of the heart the main pulmonary artery extends and branches into left and right pulmonary artery. It is a short and wide structure is about 5cm in length and 3cm in diameter, which transports unaerated blood to the lungs. The only way blood moves from the atrium and into the ventricles, is due to pressure changes. Pulmonary artery stenosis is a narrowing (stenosis) that occurs in the main pulmonary artery and/or in the left or right pulmonary artery branches. This narrowing makes it difficult for blood to reach the lungs and to get the oxygen. Without enough oxygen, the human body cannot function properly. So in order to differentiate the pressure and velocity difference between pulmonary artery and severe stenotic artery the blood flow through pulmonary arteries were simulated and analyzed using Autodesk Inventor Software (ANSYS 15.0).

II. METHODOLOGY

In Fluid Fluent, 3D geometric model is imported in design modular (geometry). The inlet and outlet of arteries is selectively named using mesh analysis. Meshing operation is performed for viewing the finite segments. The setup is done through viscous laminar model and material blood is created with cell zone and boundary condition with reference values. The result is viewed by selecting graphics-contour. The pressure and velocity of pulmonary artery under normal and stenotic condition are obtained.

III. DESIGN AND DEVELOPMENT

For design criteria, dimensions of geometric model are considered and it is designed using ANSYS design modular. Here normal pulmonary artery, and stenotic artery under mild, moderate and severe condition is designed. During stenosis the blood pressure will be high and the heart muscles will get damaged. The model is being illustrated in the figure 1.

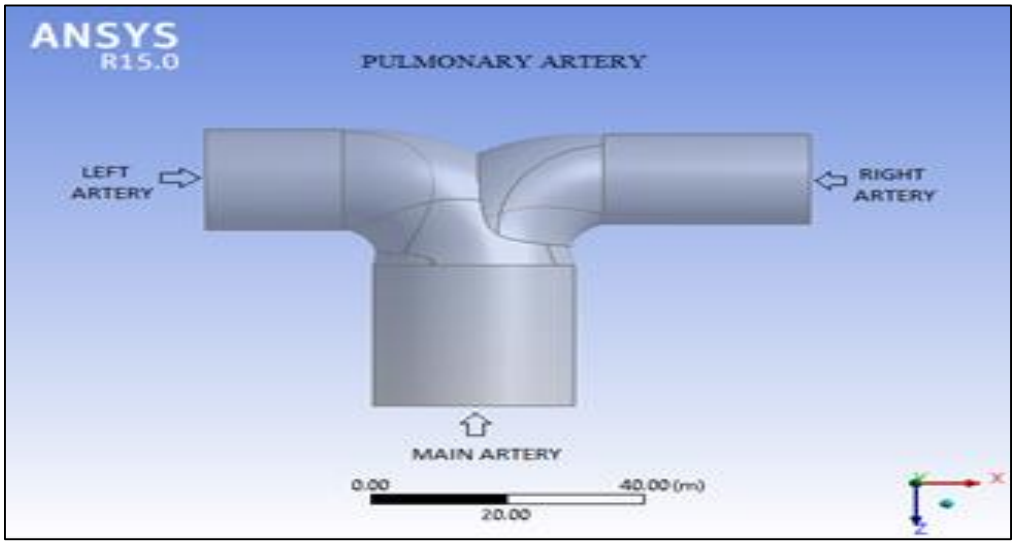

Fig. 1: The pulmonary artery model which is constructed using the Autodesk Inventor software

A. Dimensions of the Geometry

Table 1: The dimensions of geometry

Part	*Length(cm)*	*Diameter(cm)*
Main Pulmonary Artery	*3*	*2.95*
Right Pulmonary Artery	*3*	*1.98*
Left Pulmonary Artery	*2*	*2.21*

B. Fluid Flow Analysis of the Geometry

The step after the geometry construction is the meshing of the model. The inlet and the outlet of the fluid flow is marked for the further reference and it is showed in figure2.

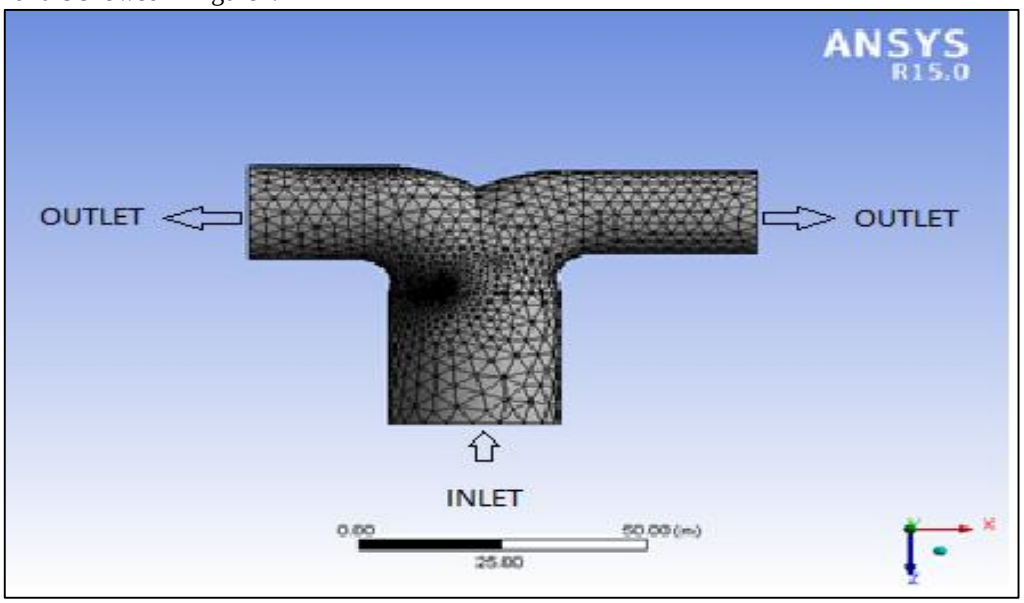

Fig. 2: The pulmonary artery model which is meshed using the Autodesk Inventor software

IV. SETUP

The setup considerations are done using the ANSYS fluent software. Here the viscous laminar flow is being selected for the analysis. The fluid material blood is created with cell zone and boundary condition with reference values.

V. RESULTS

1) Pressure and velocity of pulmonary artery in normal condition

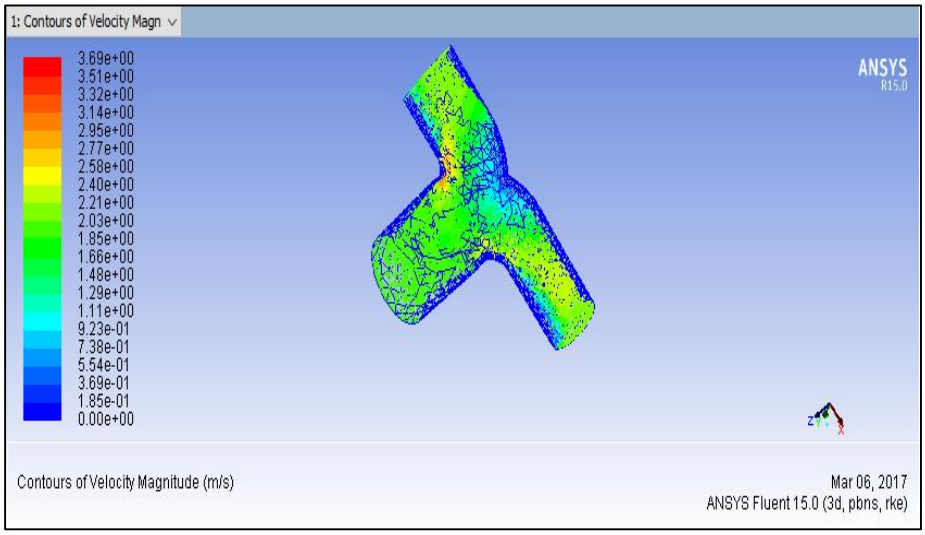

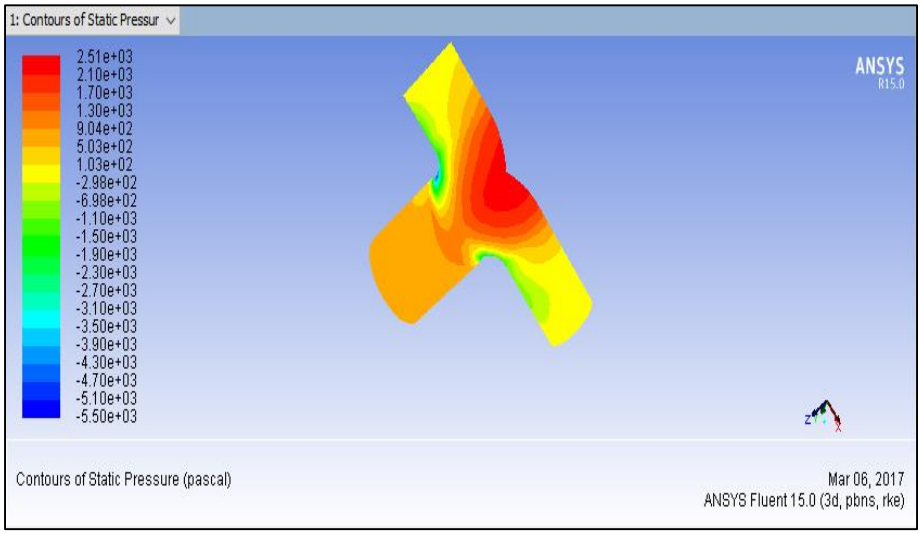

Fig. 3: Contours of static pressure (Pascal) and velocity magnitude (m/s) is illustrated

Inference-Based on the above observation, pressure in bifurcations will be high and gradually decreases as it passes out, velocity will be lower in bifurcations and increases gradually as it flows.

2) Pressure and velocity of pulmonary artery in stenotic condition

– Mild

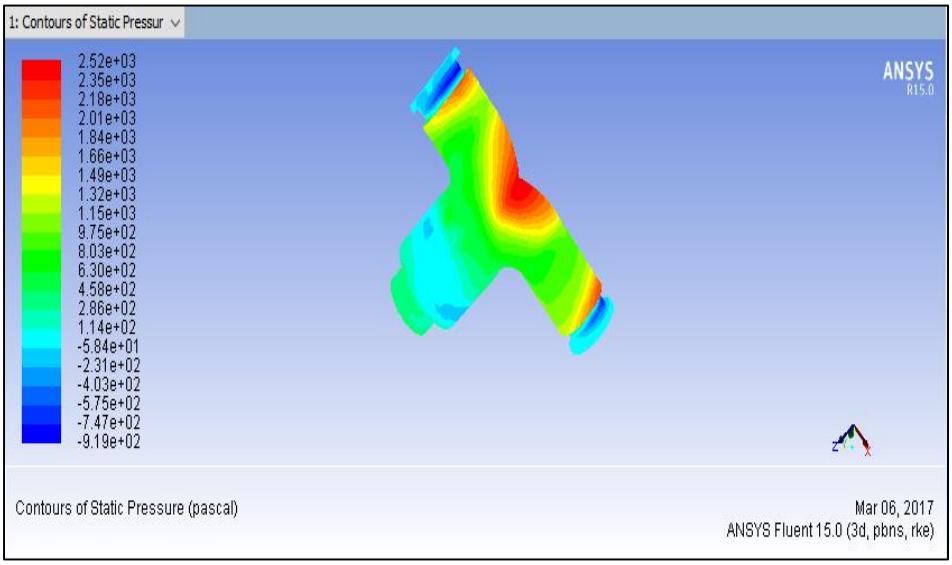

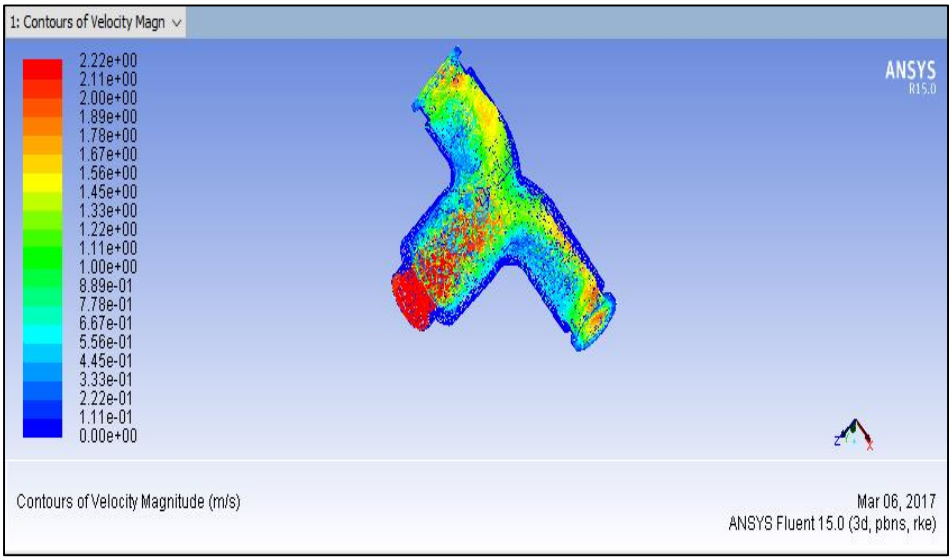

Fig. 4: Contours of static pressure (Pascal) and velocity magnitude (m/s) is illustrated

Inference-Based on above observation, symptoms do not occur during mild condition. It just requires routine checkups. The blood flow will be normal, minute deviations can be seen, but it will not cause and effects.

- Moderate

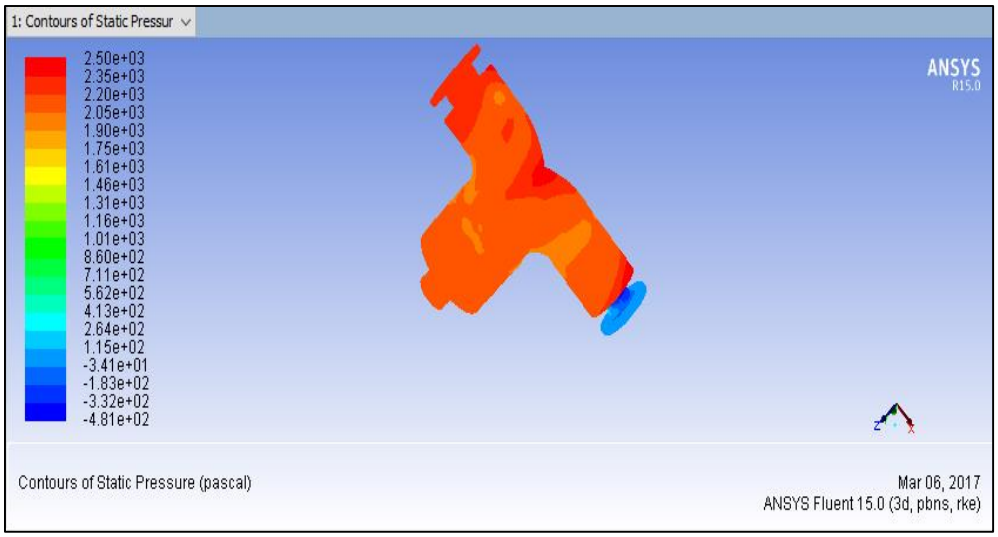

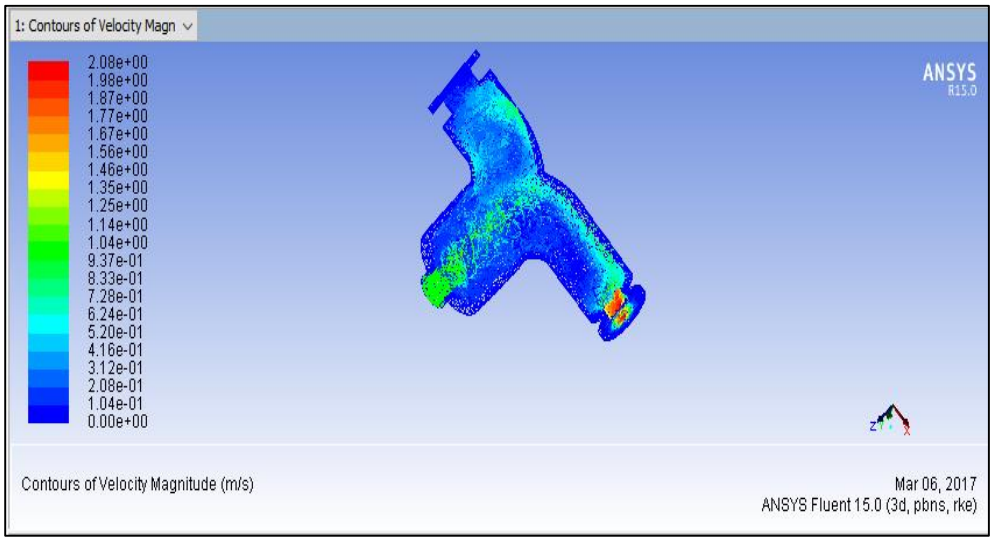

Fig. 5: Contours of static pressure (Pascal) and velocity magnitude (m/s) is illustrated

Inference-Based on above observation, the first sign of symptom for moderate is heart murmur. They should avoid strenuous activities such as weight lifting or sprinting and mostly treatment is not required.

- Severe

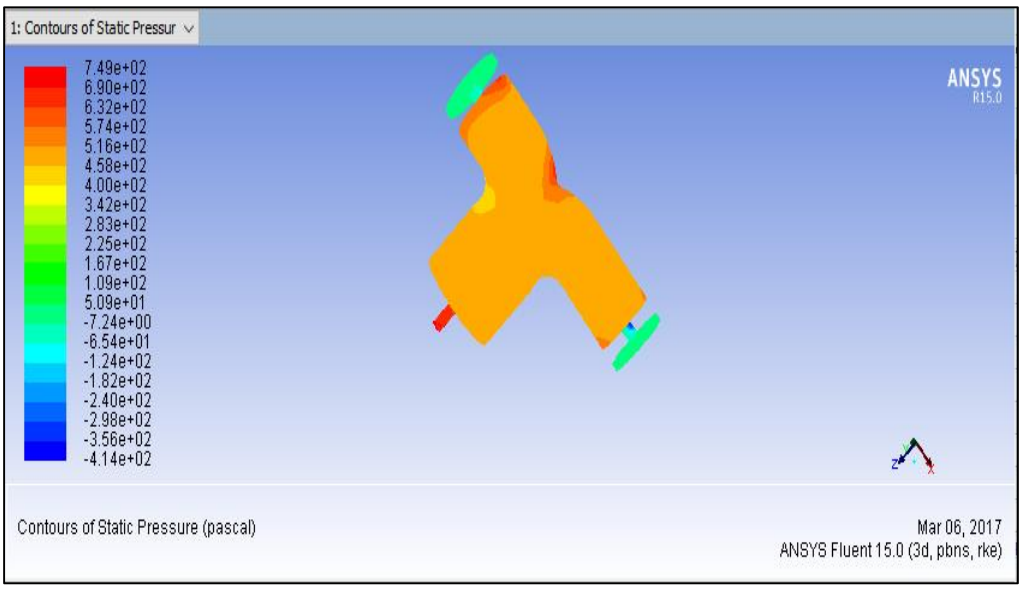

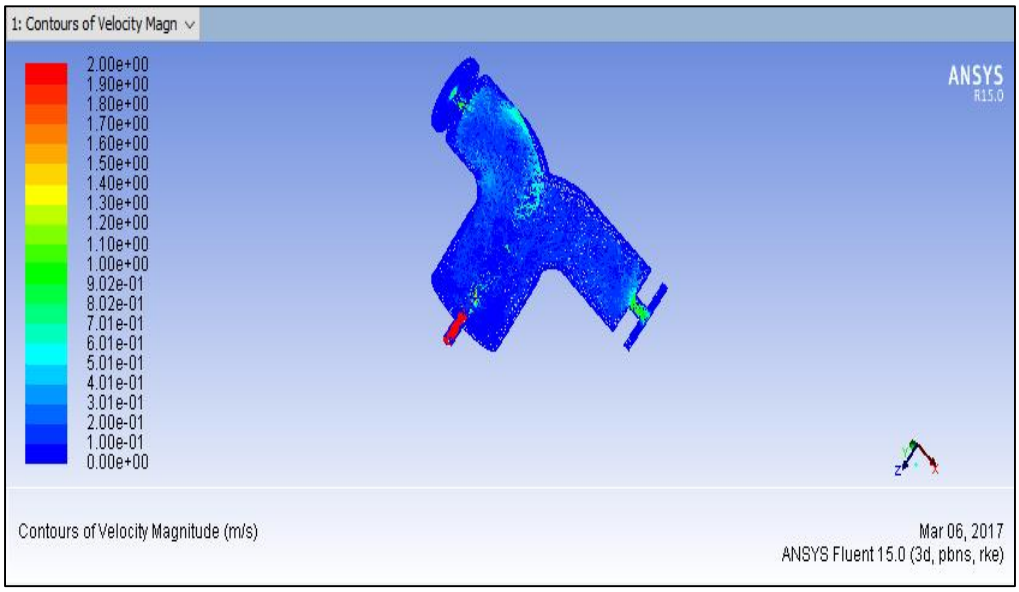

Fig. 6: Contours of static pressure (Pascal) and velocity magnitude (m/s) is illustrated

Inference-Based on above observation, symptoms include low energy, rapid breathing and cyanosis (turning blue). Blood flow to the lungs will be affected and purification process will be slow and this will lead to surgery like balloon dilation and stent placement is usually preferred.

VI. CONCLUSION

This project helps to identify under which stage surgery is required. In different stages of stenosis fat deposition in the pulmonary artery increases gradually so there is a decrease in velocity (2.18e+00-1.95e+00) of the blood flow and increase in pressure from (2.47e+03-9.42e+02). From this analysis we come to understand about the pressure and velocity variations in stenosis.

REFERENCES

[1] Pulmonary artery diameters measured by multidetector-row computed tomography in healthy adults. Bozlar U, Ors F, Deniz O, Uzun M, Gumus S, Ugurel MS, Yazar F, Tayfun C.
[2] MOLLER, T.: A caseof peripheral pulmonary stenosis. Acta paediat. 42: 390, 1953.

[3] Franch RH, Gay BB Jr. Congenital stenosis of the pulmonary artery branches: a classification, with postmortem findings in two cases. Am J Med 1963; 35(4):512–529
[4] Simonneau G, Gatzoulis MA, Adatia, I, Celermajer D, Denton C, Ghofrani A, Gomez Sanchez MA, et al. Updated clinical classification of pulmonary hypertension. J Am Coll Cardiol 2013; 62(25 suppl.): D34–D41.
[5] R.k.Raajput. Fluid mechanics and hydraluic machins. India: chand and companyJ.
[6] Tawhai MH, Burrowes KS. Respiratory Physiology & Neurobiology Modelling pulmonary blood flow. Respiratory Physiology & Neurobiology. 2008; 163:150–157. [PubMed: 18434260]
[7] Pulmonary arterial hypertension associated with congenital heart diseaseMichele D'Alto, Vaikom S. MahadevanEuropean Respiratory Review 2012 21: 328-337; DOI: 10.1183/09059180.00004712.
[8] U.Bozlar, F.Ors, O.Deniz, M.Uzun, S.Gumus, M.S.Ugurel, F.Yazar, C.Tayfun: Pulmonary artery diameters measured by multidetector-row computed tomography in healthy adults. Acta Radiol. 2007 Dec;48(10):1086-91