Transient Stability Analysis for Betterment of Power System Stability Adopting HVDC Controls

Sharad Chandra Rajpoot
Assistant Professor
Department of Electrical Engineering
G.E.C. Jagdalpur , Bastar, Chhattisgarh, India

Prashant Singh Rajpoot
Assistant Professor
Department of Electrical Engineering
L.C.I.T., Bilaspur, Chhattisgarh, India

Sanjay Kumar Singhai
Professor
Department of Electrical Engineering
G.E.C. Bilaspur, Chhattisgarh, India

Naven Prakash Singh
Associate Professor
Department of Electrical Engineering
G.E.C. Bilaspur, Chhattisgarh, India

Abstract

Incorporation of HVDC transmission subsystems in AC transmission networks has been a major change in power transmission during the last few years. This change required modifications in the performance evaluation procedures notably for load flow and stability analysis. The methodologies used for AC/DC system's load flow calculation and transient stability analysis are presented in this chapter. In this thesis, the investigations are carried out on the improvement of power system stability by utilizing auxiliary controls for controlling HVDC power flow. AC/DC load flow using eliminated variable method is utilized in the transient stability analysis. Transient stability analysis is done on single machine system and multi-machine system, using different control signals derived from the AC system.

Keywords- AC Power System, DC Power System, HVDC Transmission Line, Load Flow Analysis, Transient Stability Analysis, Power System Stability

I. INTRODUCTION

A. High-Voltage Direct-Current Transmission

Remote generation and system inter connections lead to a search for efficient power transmission at increasing power levels. The increase in voltage levels is not always feasible. The problems of AC transmission particularly in long distance transmission, has led to the development of DC transmission.[1] However, as generation and utilization of power remains at alternating current, the DC transmission requires conversion at two ends, from AC to DC at the sending end and back to AC at the receiving end. This conversion is done at converter stations-rectifier at the sending end and inverter at the receiving end.[3] The converters are static, using high power thyristors connected in series to give the required voltage ratings. The physical process of conversion is such that the same station can switch from rectifier to inverter by simple control action, thus facilitating the power reversal. [9]

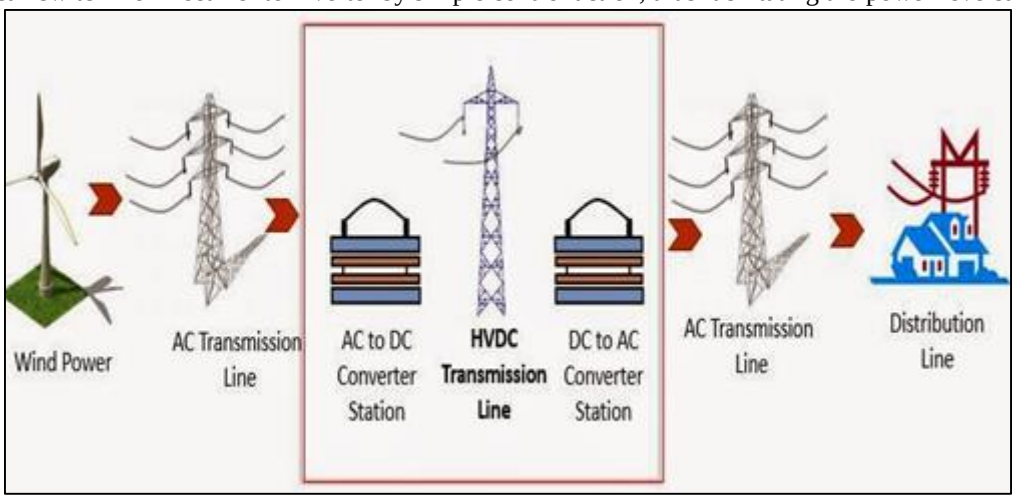

Fig. 1: HVDC Transmission System

II. TRANSIENT STABILITY ANALYSIS OF AC/DC SYSTEMS

A. Introduction

In an AC/DC power system, emergency power actions from the HVDC connection are very important, because appropriate fast changes in DC power will reduce the stress on the AC system and the magnitude of the first transient swing. An HVDC transmission link is highly controllable. Its effective use depends on appropriate utilization of this controllability to ensure desired performance of the power system. [9]

B. AC/DC Load Flow

In transient stability studies it is prerequisite to do AC/DC load flow calculations in order to obtain system conditions prior to the disturbance. The simplest way of integrating a DC link into the AC load flow is representing it by constant active and reactive power injections at the two terminal buses in the AC systems. Thus the two terminal AC/DC buses are represented as a PQ-bus with a constant, voltage independent active and reactive power. However this is clearly an inadequate representation where the links contribution to AC system reactive power and voltage conditions is significant, since the accurate operating mode of the link and its terminal equipment are ignored [3].

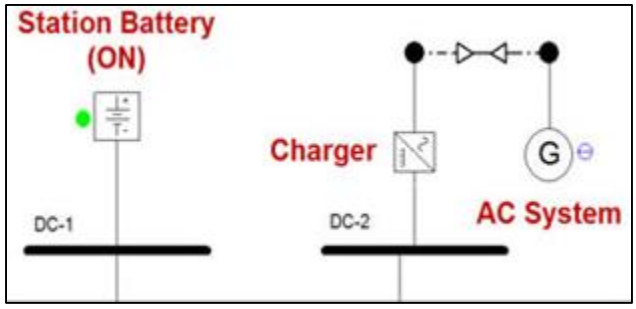

Fig. 2: AC/DC Load Flow

C. DC System Model

The equations describing the steady state behavior of a monopolar DC link can be summarized as follows.

$$V_{dr} = \frac{3\sqrt{2}}{\pi} a_r V_{tr} \cos\alpha_r - \frac{3}{\pi} X_c I_d \tag{1}$$

$$V_{di} = \frac{3\sqrt{2}}{\pi} a_i V_{ti} \cos\gamma_i - \frac{3}{\pi} X_c I_d \tag{2}$$

$$V_{dr} = V_{di} + r_d I_d \tag{3}$$

$$P_{dr} = V_{dr} I_d \tag{4}$$

$$P_{di} = V_{di} I_d \tag{5}$$

$$S_{dr} = k \frac{3\sqrt{2}}{\pi} a_r V_{tr} I_d \tag{6}$$

$$S_{di} = k \frac{3\sqrt{2}}{\pi} a_i V_{ti} I_d \tag{7}$$

$$Q_{dr} = \sqrt{S_{dr}^2 - P_{dr}^2} \tag{8}$$

$$Q_{di} = \sqrt{S_{di}^2 - P_{di}^2} \tag{9}$$

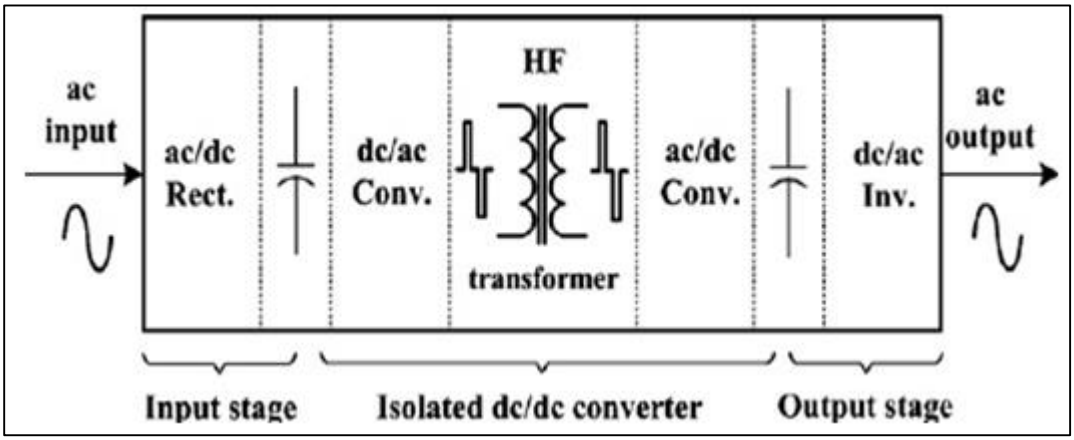

Fig. 3: DC System Model

1) AC/DC Power Flow Equations

When the DC-link is included in the power flow equations, only the mismatch equations at the converter terminal AC buses have to be modified.

$$\Delta P_{tr} = P_{tr}^{spec} - P_{tr}^{ac}\left(\delta, v\right) - P_{dr}\left(V_{tr}, V_{ti}, x_{dc}\right) \tag{10}$$

$$\Delta P_{ti} = P_{ti}^{spec} - P_{ti}^{ac}\left(\delta, v\right) + P_{di}\left(V_{tr}, V_{ti}, x_{dc}\right) \tag{11}$$

$$\Delta Q_{tr} = Q_{tr}^{spec} - Q_{tr}^{ac}\left(\delta, v\right) - Q_{dr}\left(V_{tr}, V_{ti}, x_{dc}\right) \tag{12}$$

$$\Delta Q_{ti} = Q_{ti}^{spec} - Q_{ti}^{ac}\left(\delta, v\right) - Q_{di}\left(V_{tr}, V_{ti}, x_{dc}\right) \tag{13}$$

Where xdc is a vector of internal DC-variables. The DC-variables satisfy

$$R\left(V_{tr}, V_{ti}, x_{dc}\right) = 0 \tag{14}$$

Where R is a set of equations given by (1)-(3) and four control specifications.
In the extended variable method, (15) is solved iteratively.

$$\begin{bmatrix} \Delta P \\ \Delta P_t \\ \Delta Q \\ \Delta Q_t \\ \Delta R \end{bmatrix} = \left[\begin{array}{cc|cc|c} \multicolumn{2}{c|}{H} & \multicolumn{2}{c|}{N} & \begin{matrix}0\\A\end{matrix} \\ \hline \multicolumn{2}{c|}{J} & \multicolumn{2}{c|}{L} & \begin{matrix}0\\C\end{matrix} \\ \hline 0 & 0 & 0 & D & E \end{array}\right] \begin{bmatrix} \Delta\delta \\ \Delta\delta_t \\ \Delta V/V \\ \Delta V_t/V_t \\ \Delta x_{dc} \end{bmatrix} \tag{15}$$

In the sequential method, (14) is solved after each iteration of (2.16).

$$\begin{bmatrix} \Delta P \\ \Delta Q \end{bmatrix} = \left[\begin{array}{c|c} H & N \\ \hline J & L \end{array}\right] \begin{bmatrix} \Delta\delta \\ \Delta V/V \end{bmatrix} \tag{16}$$

2) Control Modes

Seven variables and three independent equations, (1)-(3), are introduced when a DC-link is included. Hence, four specifications have to be made in order to define a unique solution. The control modes used here are summarized in Table-1, it will suffice to illustrate the analytical elimination procedure.

Control mode A is the base case, which in the well-known current margin control corresponds to one terminal controlling the voltage and the other the current, or equivalently the power. The control angles and the DC-voltage are specified, and the converter transformer tap positions are varied in order to meet these specifications. The other modes in Table-1 are obtained from mode A if variables hit their limits during the power flow computations, or if the time scale is such that the taps can be assumed to be fixed. The modes that are obtained when limits are encountered depend on the control strategy of the HVDC-scheme, and this must be accounted for in the computations. For modes B - D, a_r determines α_r and a_i determines the direct voltage, which normally is the case for current control in the rectifier. For modes E - G, a_r determines the direct voltage. Subscript '*I*' refers to constant current control.

Table 1: Control Modes

Control Mode	*Specified Variables*			
A	α_r	γ_i	V_{di}	P_{di}
B	a_r	γ_i	V_{di}	P_{di}
C	α_r	γ_i	a_i	P_{di}
D	a_r	γ_i	a_i	P_{di}
E	α_r	γ_i	a_r	P_{di}
F	α_r	a_i	V_{di}	P_{di}
G	α_r	a_i	a_r	P_{di}
A_I	α_r	γ_i	V_{di}	I_d
B_I	a_r	γ_i	V_{di}	I_d
C_I	α_r	γ_i	a_i	I_d
D_I	a_r	γ_i	a_i	I_d
E_I	α_r	γ_i	a_r	I_d
F_I	α_r	a_i	V_{di}	I_d
G_I	α_r	a_i	a_r	I_d

D. The Eliminated Variable Method

In the eliminated variable method, the equations in (14) are, *in principle*, solved for x_{dc}.

$$x_{dc} = f(V_{tr}, V_{ti}) \tag{17}$$

The real and reactive powers consumed by the converters can then be written as functions of V_{tr} and V_{ti}.

$$\begin{aligned} P_{dr} &= P_{dr}(V_{tr}, V_{ti}, x_{dc}) \\ &= P_{dr}(V_{tr}, V_{ti}, f(V_{tr}, V_{ti})) \\ &= P_{dr}(V_{tr}, V_{ti}) \end{aligned} \tag{18}$$

It is not needed to derive explicit functions for the real and reactive powers, only to find a sequence of computations such that the real and reactive powers and their partial derivatives w.r.t. the AC terminal voltages can be computed. If all real and reactive powers are written as functions of V_{tr} and V_{ti}, (15) can be replaced by (19).

$$\begin{bmatrix} \Delta P \\ \Delta Q \end{bmatrix} = \left[\begin{array}{c|c} H & N \\ \hline J & L \end{array}\right] \begin{bmatrix} \Delta\delta \\ \Delta V / V \end{bmatrix} \tag{19}$$

$$N'(tr,tr) = V_{tr} \frac{\partial P_{tr}^{ac}}{\partial V_{tr}} + V_{tr} \frac{\partial P_{dr}(V_{tr}, V_{ti})}{\partial V_{tr}} \tag{20}$$

$$N'(tr,ti) = V_{ti} \frac{\partial P_{tr}^{ac}}{\partial V_{ti}} + V_{ti} \frac{\partial P_{dr}(V_{tr}, V_{ti})}{\partial V_{ti}} \tag{21}$$

$$N'(ti,tr) = V_{tr} \frac{\partial P_{ti}^{ac}}{\partial V_{tr}} - V_{tr} \frac{\partial P_{di}(V_{tr}, V_{ti})}{\partial V_{tr}} \tag{22}$$

$$N'(ti,ti) = V_{ti} \frac{\partial P_{ti}^{ac}}{\partial V_{ti}} - V_{ti} \frac{\partial P_{di}(V_{tr}, V_{ti})}{\partial V_{ti}} \tag{23}$$

L' is modified analogously. Thus, in the eliminated variable method, four mismatch equations and up to eight elements of the Jacobian have to be modified, but *no new variables* are added to the solution vector, when a DC-link is included in the power flow. The partial derivatives are those required by (19); $\partial P_{dr}(V_{tr},V_{ti})/\partial V_{tr}$, for example, is the derivative of P_{dr} w.r.t. V_{tr}, assuming V_{ti} is kept constant. The DC variables, however, are not kept constant as opposed to $\partial P_{dr}(V_{tr},V_{ti},x_{dc})/\partial V_{tr}$, which is used in (15). Although (19) looks like (16), it is mathematically more similar to (15). The Jacobian in (19) is however normally well-conditioned than the one in (15).

From equations (1), (2) and (3) solving for I_d we get

$$Id = \frac{3\sqrt{2}(a_r V_{tr} \cos \alpha_r - a_i V_{ti} \cos \gamma_i)}{r_d \pi}$$

Substituting the value of I_d in (2.1) gives

$$Vdr = \frac{3\sqrt{2} a_r Vtr \cos \alpha_r}{\pi} - \frac{9\sqrt{2}(a_r V_{tr} \cos \alpha_r - a_i V_{ti} \cos \gamma_i}{r_d \pi^2}$$

But from (2.4), $P_{dr} = V_{dr} I_d$, therefore we obtain

E. Generator Representation

The synchronous machine is represented by a voltage source, in back of a transient reactance, that is constant in magnitude but changes in angular position. This representation neglects the effect of saliency and assumes constant flux linkages and a small change in speed. If the machine rotor speed is assumed constant at synchronous speed, a normal and accepted assumption for stability studies, then M is constant. If the rotational power losses of the machine due to such effects as wind age and friction are ignored, then the accelerating power equals the difference between the mechanical power and the electrical power [6]. The classical model can be described by the following set of differential and algebraic equations:

Differential:

$$\frac{d\delta}{dt} = \omega - 2\pi f$$

$$\frac{d^2\delta}{dt^2} = \frac{d\omega}{dt} = \frac{\pi f}{H}\left(P_m - P_e\right)$$

Algebraic:

$$E' = E_t + r_a I_t + jx_d' I_t$$

Where E'=voltage back of transient reactance

E_t =machine terminal voltage

I_t=machine terminal current

r_a =armature resistance

x_d' =transient reactance

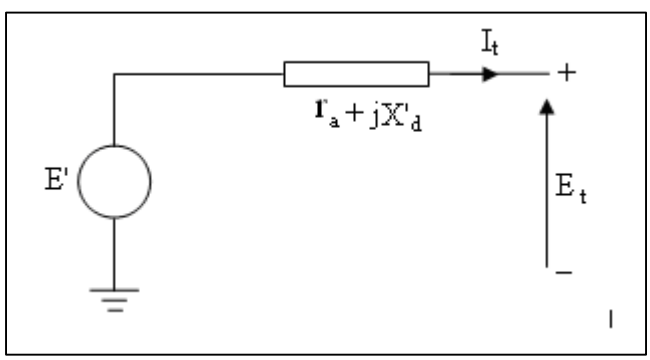

Fig. 4: Generator Classical Model

F. Steps of the AC-DC Transient Stability Study

Generally, the DC scheme interconnects two or more, otherwise independent, AC systems and the stability assessment is carried out for each of them separately, taking into account the power constraints at the converter terminal. If the DC link is part of a single (synchronous) AC system, the converter constraints will apply to each of the nodes containing a converter terminal.[18] The basic structure of transient stability program is given below [5]:

1) The initial bus voltages are obtained from the AC/DC load flow solution prior to the disturbance.
2) After the AC/DC load flow solution is obtained, the machine currents and voltages behind transient reactance are calculated.
3) The initial speed is equated to 2 π f and the initial mechanical power is equated to the real power output of each machine prior to the disturbance.
4) The network data is modified for the new representation. Extra nodes are added to represent the generator internal voltages. Admittance matrix is modified to incorporate the load representation.
5) Set time, t=0;
6) If there is any switching operation or change in fault condition, modify network data accordingly and run the AC/DC load flow.

7) Using Runge-Kutta method, solve the machine differential equations to find the changes in the internal voltage angle and machine speeds.
8) Internal voltage angles and machine speeds are updated and are stored for plotting.
9) AC/DC load flow is run to get the new output powers of the machine.
10) Advance time, $t=t+\Delta t$.
11) Check for time limit, if $t \leq t_{max}$ repeat the process from step 6, else plot the graphs of internal voltage angle variations and stop the process.

III. ENHANCEMENT OF STABILITY USING HVDC CONTROLS

A. Introduction

The controllability of HVDC is often cited as an important advantage of DC systems. This controllability can be valuable in improving the performance of large power systems. To achieve the promised advantages, control systems must perform appropriately for various disturbances and system conditions.[18]The basic control philosophy and the auxiliary controls that can be used are discussed in brief in this chapter.

B. Basic Control Principles

The HVDC system is basically constant-current controlled for the following two important reasons:

– To limit over current and minimize damage due to faults.
– To prevent the system from running down due to fluctuations of the ac voltages.

It is because of the high-speed constant current control characteristic that the HVDC system operation is very stable [1]. The following are the significant aspects of the basic control system:

1) The rectifier is provided with a current control and an α-limit control. The minimum α reference is set at about 5^0 so that sufficient positive voltage across the valve exists at the time of firing, to ensure successful commutation. In the current control mode, a closed loop regulator controls the firing angle and hence the dc voltage to maintain the direct current equal to the current order. Tap changer control of the converter transformer brings α with in the range of 10^0 to 20^0. A time delay is used to prevent unnecessary tap movements during excursions of α.
2) The inverter is provided with a constant extinction angle (CEA) control and current control. In the CEA control mode, γ is regulated to a value of about 15^0. This value represents a trade-off between acceptable var consumption and a low risk of commutation failure. Tap changer control is used to bring the value of γ close to the desired range of 15^0 to 20^0.
3) Under normal conditions, the rectifier is on current control mode and the inverter is on CEA control mode. If there is a reduction in the ac voltage at rectifier end, the rectifier firing angle decreases until it hits the α_{min} limit. At this point, the rectifier switches to α_{min} control and the inverter will assume current control.
4) To ensure satisfactory operation and equipment safety, several limits are recognized in establishing the current order: maximum current limit, minimum current limit, and voltage-dependent current limit.
5) Higher-level controls may be used, in addition to the above basic controls, to improve AC/DC system interaction and enhance AC system performance.

All schemes used to date have used the above modes of operation for the rectifier and the inverter. However, there are some situations that may warrant serious investigation of a control scheme in which the inverter is operated continuously in current control mode and the rectifier in α-minimum control mode. Enhanced performance into weak systems may be one case.

C. Proposed Work

In this work, the advantage of fast HVDC power modulation is utilized to improve the stability of the system with different types of controllers and control signals.

1) Case

A single machine system is considered with parallel AC and DC transmission, having a Type – 0 Auxiliary controller and a Proportional Integral type current controller for the HVDC system. Here, the control signals are derived from generator speed deviation, generator phase angle deviation and variations of power in the parallel AC line are used and combinations of these signals are also utilized.

IV. CONVENTIONAL CONTROL STRATEGIES

A. Constant Current Controller

Here Proportional Integral (PI) type controller is used [7]. This type of controller has feedback signal (I¬DC) to regulate the firing angle (Alfa) at the rectifier end to maintain the DC link current constant and the same is shown in figure 4.2.

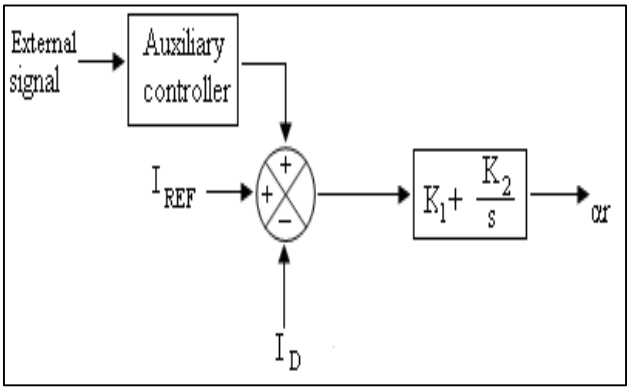

Fig. 5: Constant Current Controller

B. Test System

A single machine system connected to infinite bus through parallel AC and DC links is considered and is shown in fig.6.

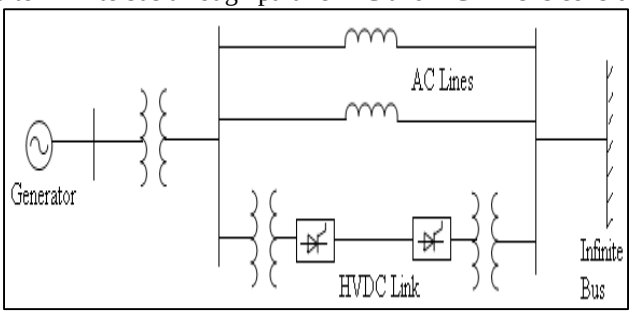

Fig .6: Parallel AC and DC system

The single machine system, using the Type – 0 auxiliary controller and a Proportional Integral type current controller for HVDC link is used to demonstrate the enhancement of stability by utilizing the controllability of the HVDC line. The DC link is represented by a simplified transfer function model. The following numerical data on 100 MVA base is used.

V. RESULT

A. System Data

– Generator :

Pg=3.0 pu H=6.0 pu
X_d=0.1 pu D=0.01
F=50Hz

– AC transmission lines:

X_{eq} = 0.15 pu

– Transformer:

X_t=0.05 pu

– DC link:

K_1=0.4 K_2=0.3 T_w=0.05
L_d=0.03 R_d=0.05 X_c=0.126
Initial conditions
δ=0.6435
Δw =0
I_d=0.8957
Alfa=0.279
V_{di}=0.99

The analysis is performed using the disturbances like variations in mechanical power (0.3 pu) and outage of one of the parallel AC lines. The stability of the system is enhanced utilizing different stabilizing signals for power modulation in the HVDC link.

1) Case: Mechanical Power Variations

The mechanical power of the generator is increased by 0.3 pu and different control signals from the AC system are utilized for the stability improvement. Without any external control signal applied to the HVDC system the stability analysis is performed and the

generator angle plot is as shown in figure no.7. Considering variations in speed and parallel AC tie power variations different control signals are applied to HVDC controller. The plots of phase angles of generator for different stabilizing signals are shown in figures 7-12.

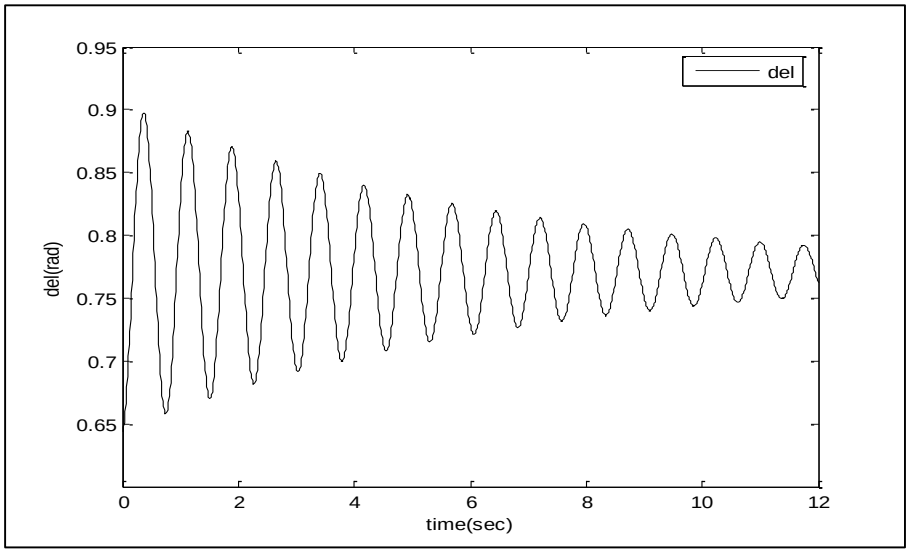

Fig. 7: Plot of Generator angle without any external control signal applied

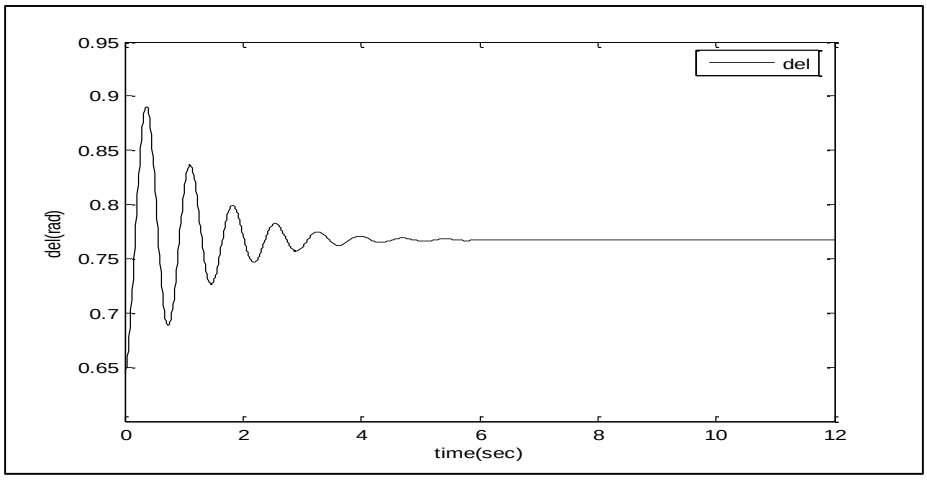

Fig. 8: Plot of Generator angle with Δw as the auxiliary stabilizing signal (K_w= 1.4)

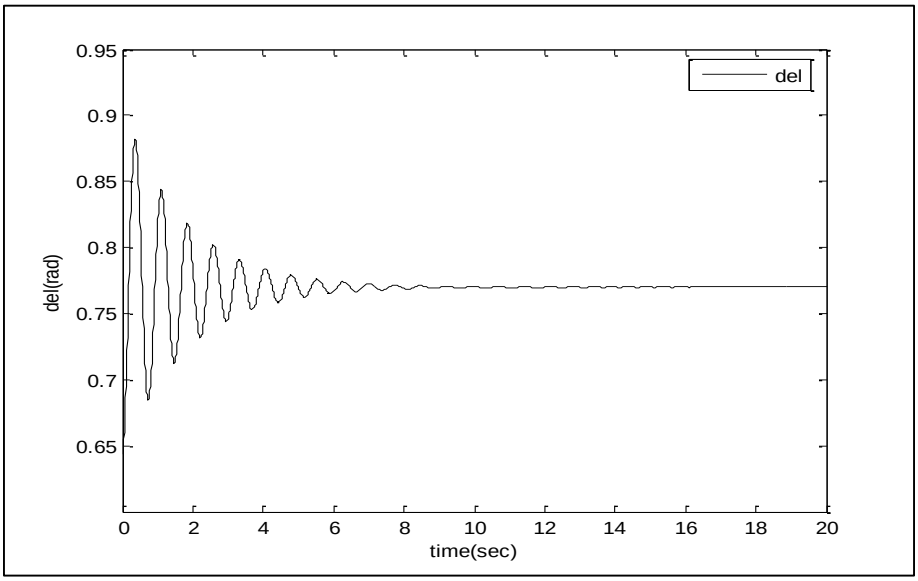

Fig. 9: Plot of generator angle with ΔPac (change in power of adjacent AC line) as the auxiliary stabilizing signal (K_w= 0.1)

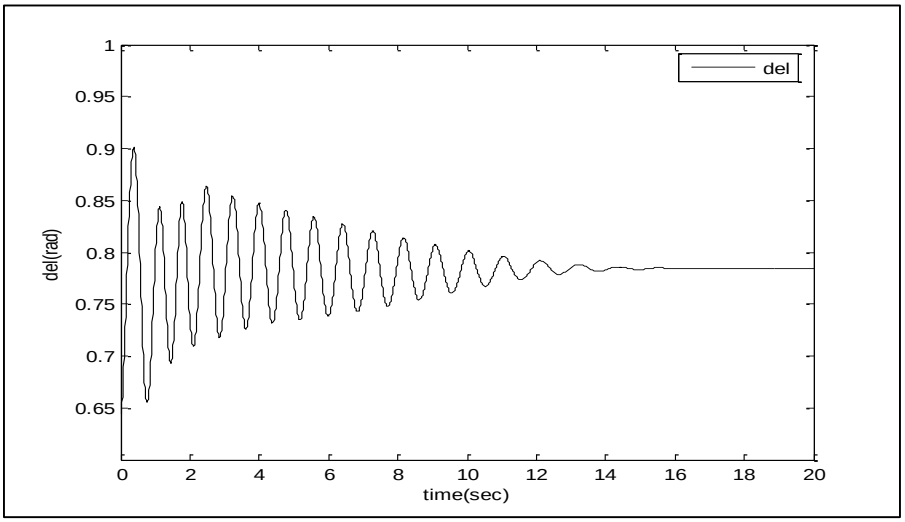

Fig. 10: plot of generator angle with $\frac{d(\Delta\omega)}{dt}$ as the auxiliary stabilizing signal (K_d=0.45)

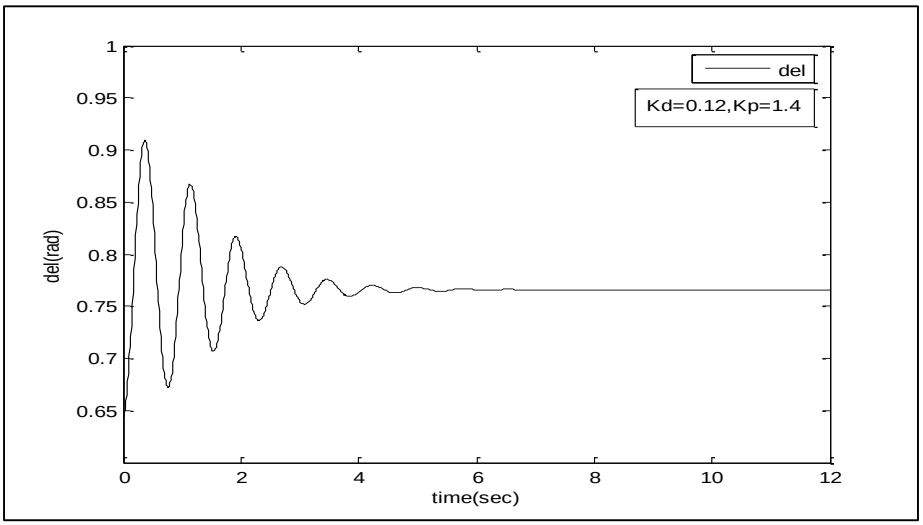

Fig. 11: Plot of generator angle with K_p* Δw +K_d* $\frac{d(\Delta\omega)}{dt}$ as the auxiliary stabilizing signal (K_p=1.4, K_d =0.12)

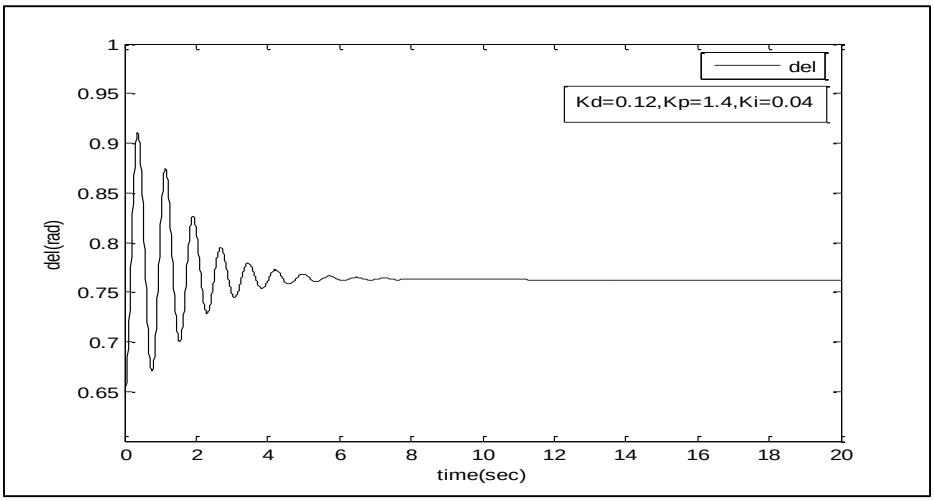

Fig. 12: plot of generator angle with K_p* Δw +K_d* $\frac{d(\Delta\omega)}{dt}$ +K_iΔδ as the auxiliary stabilizing signal (K_p=1.4, K_d =0.12, K_i=0.04)

VI. CONCLUSION

For the variations in the mechanical power of the generator, in the single machine system, the speed change signal as a control signal is more effective as shown in figures 4.5 to 4.9. When the HVDC current controller and line dynamics are not considered, the transient stability of the multi machine system after the occurrence of the specified fault, is improved by using a PI controller with average acceleration as the control signal, as shown in figure 4.19

This thesis demonstrates that, control mechanisms can be designed and incorporated for HVDC power modulation, to augment the stability of the power system.

VII. SCOPE OF FUTURE WORK

By using fuzzy logic the gains of the P-term, I-term and D-term of the control signal, specified in the last chapter, are adjusted in every sampling interval in accordance to a set of linguistic control rules and in conjunction. This feature is desirable because as the operating conditions of a system begin to change, deterioration in performance will result if a fixed gain controller is applied.

REFERENCES

[1] P. Kundur, "Power System Stability and Control", McGraw- Hill, Inc., 1994.
[2] Prabha Kundur, John Paserba, "Definition and Classification of Power System Stability", IEEE Trans. on Power Systems., Vol. 19, No. 2, pp 1387- 1401, May 2004.
[3] A. Panosyan, B. R. Oswald, "Modified Newton- Raphson Load Flow Analysis for Integrated AC/DC Power Systems".
[4] T. Smed, G. Anderson, "A New Approach to AC/DC Power Flow", IEEE Trans. on Power Systems., Vol. 6, No. 3, pp 1238- 1244, Aug. 1991.
[5] Stagg and El- Abiad, "Computer Methods in Power System Analysis", International Student Edition, McGraw- Hill, Book Company, 1968.
[6] Jos Arrillaga and Bruce Smith, "AC- DC Power System Analysis", The Institution of Electrical Engineers, 1998.
[7] K. R. Padiyar, "HVDC Power Transmission Systems", New Age International (P) Ltd., 2004.
[8] "IEEE Guide for Planning DC Links Terminating at AC Locations Having Low Short-Circuit Capacities", The Institute of Electrical and Electronics Engineers, Inc., 1997.
[9] Garng M. Huang, Vikram Krishnaswamy, "HVDC Controls for Power System Stability", IEEE Power Engineering Society, pp 597- 602, 2002.
[10] Sharad Chandra Rajpoot, Prashant Singh Rajpoot and Durga Sharma," Power system Stability Improvement using Fact Devices"International Journal of Science Engineering and Technology research ISSN 2319-8885 Vol.03, Issue. 11,June-2014,Pages:2374-2379.
[11] Sharad Chandra Rajpoot, Prashant singh Rajpoot and Durga Sharma,"Summarization of Loss Minimization Using FACTS in Deregulated Power System", International Journal of Science Engineering and Technology research ISSN 2319-8885 Vol.03, Issue.05,April & May-2014,Pages:0774-0778.
[12] Sharad Chandra Rajpoot, Prashant Singh Rajpoot and Durga Sharma, "Voltage Sag Mitigation in Distribution Line using DSTATCOM" International Journal of Science Engineering and Technology research ISSN 2319-8885 Vol.03, Issue.11, April June-2014, Pages: 2351-2354.
[13] Prashant Singh Rajpoot, Sharad Chandra Rajpoot and Durga Sharma, "Review and utility of FACTS controller for traction system", International Journal of Science Engineering and Technology research ISSN 2319-8885 Vol.03, Issue.08, May-2014, Pages: 1343-1348.
[14] Sharad Chandra Rajpoot, Prashant Singh Rajpoot and Durga Sharma, "A typical PLC Application in Automation", International Journal of Engineering research and TechnologyISSN 2278-0181 Vol.03, Issue.6, June-2014.
[15] Iba K. (1994) 'Reactive power optimization by genetic algorithms', IEEE Trans on power systems, May, Vol.9, No.2, pp.685-692.
[16] Sharad Chandra Rajpoot, Prashant Singh Rajpoot and Durga Sharma,"21st century modern technology of reliable billing system by using smart card based energy meter",International Journal of Science Engineering and Technology research,ISSN 2319-8885 Vol.03,Issue.05 ,April & May-2014,Pages:0840-0844.
[17] Prashant singh Rajpoot , Sharad Chandra Rajpoot and Durga Sharma,"wireless power transfer due to strongly coupled magnetic resonance", international Journal of Science Engineering and Technology research ISSN 2319-8885 Vol.03,.05,April & May-2014,Pages:0764-0768.
[18] Sharad Chandra Rajpoot, Prashant Singh Rajpoot and Durga Sharma," Power system Stability Improvement using Fact Devices"International Journal of Science Engineering and Technology research ISSN 2319-8885 Vol.03,Issue.11,June-2014,Pages:2374-2379.
[19] Choo Min Lim, Takashi Hiyama, "Application of A Rule-Based Control Scheme for Stability Enhancement of Power Systems", pp 1347- 1357, IEEE 1995.