Design and Fabrication of In-Pipe Inspection Robot

Akshay B. Rakate
UG Student
Department of Mechanical Engineering
NBN SSOE Savitribai Phule Pune University

Shripad R. Latange
UG Student
Department of Mechanical Engineering
NBN SSOE Savitribai Phule Pune University

Akshaykumar B. Navale
UG Student
Department of Mechanical Engineering
NBN SSOE Savitribai Phule Pune University

Vinayak G. Nalkar
UG Student
Department of Mechanical Engineering
NBN SSOE Savitribai Phule Pune University

Prof. V. R. Kagade
Assistant Professor
Department of Mechanical Engineering
NBN SSOE Savitribai Phule Pune University

Abstract

Many kinds of pipes are being utilized to construct important lifelines such as water and gas supply in our contemporary society. Also pipes are widely used in chemical industries and in gulf countries for carrying petrol, diesel, oil etc. But after some years these pipes get damaged and defects are occurring in pipe. If the defects in the pipe are caused by rust and nature calamity, it is difficult to find out the defects and the location of the defects, and also there is great amount of loss of fluids and gases. Thus scheduled inspection must be done. If we decide to do this inspection manually then large amount of time, effort and labour is necessary to grub up the pipes that are buried in the ground. If the robot can inspect inside the pipes, fast and accurate examination will be able to be done at low cost. Size and shape adaptability will be achieved by chuck-jaw mechanism.
Keywords- In-Pipe Inspection, Chuck Jaw Mechanism, Pipeline Exploration Robot, Laws of Robotics, Big Rocker Double Pole Switch

I. INTRODUCTION

Robotics is one of the fastest growing engineering fields, presently they are used for wide variety of works especially in manufacturing industries e.g. spot welding, loading, and unloading of the tool and work piece, painting etc. Primarily robots are designed in such way that they reduce human intervention from labor intensive and hazardous work environment; sometimes it is also used to discover inaccessible workplace which is generally impossible to access by humans. The complex internal geometry and hazard content constraints of pipes require robots for inspection purpose. With these constraints, inspection of the pipe becomes so more necessary that, tolerating it may lead to some serious industrial accidents which contaminate environment and loss of human lives also. For inspection of such pipes, robot requirement is must especially in order to check corrosion level of pipe, recovery of usable parts from pipe interior, for a sampling of sludge and scale formation on pipe internal surface etc. Designing of a new in-pipe inspection robot is carried out in this research work. It involves kinematic and dynamic analysis of screw drive type robot. Kinematic calculations are performed to find the trajectory of rotor motion and to also to analyze the motion of the robot in the straight and curved pipeline. From the dynamic equation of robot, the effect of frictional force, drag force, and mass of the robot are analyzed on the robot to find the required minimum motor torque for moving in horizontal, inclined and vertical pipelines. After performing design steps, the solid model is prepared in CATIA V5 of the proposed robot. Motion simulation and experimental study are performed with the help of this solid model and an initial robot prototype.

A. Problem Statement

To design and develop pipe inspecting robot which will travel in the pipe and provide its actual video footage to the operator. To guarantee excellent performance in pipe inspection we implemented chuck jaw mechanism. Mathematical modeling will be done in CATIA V5 and analysis will be done on ANSYS 14.5 rigid body dynamics. To improve the reliability of the product the actual model will be built. This robot model will be used as the base robot model for in pipe inspection robot. It should have size and shape adaptability to go through pipes of diameter ranging from 16 to 20 inches.

B. Objective

- To make an adaptive robotic design so as to adjust it according to the pipeline parameters.
- To add gripper to robot which can contract and expand according to the pipeline parameters.
- To control the whole system with remote.

C. Scope

- The pneumatic arm can be mounted on a robot for performing operations inside pipes.
- Oxygen sensor and oxygen supplier can be installed.
- The smoke sensor can be added to sense the dangerous gasses concentration inside the pipe.

D. Methodology

The principle of this project is to inspect various pipes and provide its actual footage to operator. Robot works on chuck jaw mechanism. Robot is designed in such a way that it reduce human efforts while inspecting the industrial pipes. Various steps are carried out to reduce weight of robot. Hence inspection of pipes is done by robot to get required data.

II. LITERATURE REVIEW

Jong-Hoon Kim, Gokarna Sharma, and S. Sitharama Iyengar have proposed the design and implementation of a single module fully autonomous mobile pipeline exploration robot, called FAMPER that can be used for the inspection of 150mm pipelines. This robot consists of four wall-press caterpillars operated by two DC motors each. The speed of each caterpillar is controlled independently to provide steering capability to go through 45-degree elbows, 90-degree elbows, T-branches, and Y branches. The uniqueness of this paper is to show the opportunity of using 4 caterpillar configuration for superior performance in all types of complex networks of pipelines. The robot system has been developed and experimented in different pipeline layouts. [1]

Atul Gargade1, Dhanraj Tambuskar, Gajanan Thokal have proposed that robot consists of a foreleg system, a rear leg system, and a body. The fore and rear leg systems are constructed by using three worm gear system that is arranged at an angle of 120 degrees with respect to each other to operate inside a pipe of different diameters. The springs are attached to each leg and the robot body to operate in pipes of 140mm to 200mm diameter range. [2]

Palwinder Kaur1, Ravinder Kaur, Gurpreet Singh have worked on innovative concept to handle the bore well rescue operations without human intervention and to inspect any type of leakage in the pipe. Wheeled leg mechanism is employed in this design to go inside the pipe. The legs are circumferentially and symmetrically spaced out 120º apart. The robot is made adaptive so that it can adjust its legs according to the pipeline dimensions. This structural design makes it possible to have the adaptation to the diameter of the pipe and to have adjustable attractive force towards the walls of the pipe. [3]

Nur Afiqah Binti Haji Yahya, Negin Ashrafi, Ali Hussein Humod have explained the robotics application in various industries mainly in pipeline inspection. This review paper was to fulfill the requirement of Automation and Robotics module assessment. The objectives of this review paper are; to observe different robotics applications in pipelines inspection, to learn the different design of robots in pipeline inspection, to outline the problems and adaptability improvements in the robotics application that was applied. At the end of this review paper, it was concluded that improvements were seen in few designs of the robot example like the Parallelogram Wheel Leg. [4]

Ankit Nayak, S. K. Pradhan have designed robot in such way that they remove human intervention from labor intensive and hazardous work environment, sometimes they are also used to explore inaccessible workplaces which are generally impossible to access by humans. The inspection of pipe comes in the same category because they carry toxic chemicals, fluids and most of the time has small internal diameter or bends which become inaccessible to human. This paper proposed model is a screw driver type wall press adaptable wheeled In-pipe inspection robot. It is able to move through vertical, horizontal pipes and it can easily pass through elbow of a pipeline. This model comprises of three modules- rotor, stator, and control unit. The Rotor module has three wheels mounted on the outer periphery with a helix angle of 15. Wheels of rotor follow the helical path on the internal surface of the pipeline and move in the longitudinal direction inside the pipe [5]

III. DESIGN- CAD 3D MODELS

A. Design of Parts

Table 1: CATIA Parts

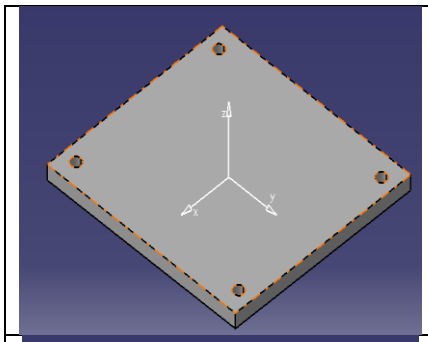	*Fixed Plate* *Material- Acrylic* *Thickness-3mm* *Height-40mm* *Width-60mm* *Operation Performed-* *Laser Cutting, Tapping*	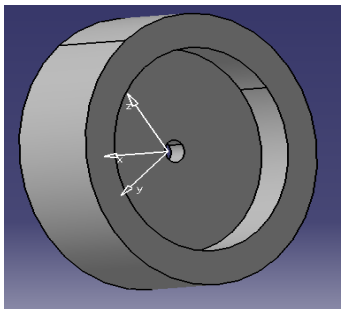	*Wheel* *Material- Rubber* *Outer Diameter-72mm* *Inner Diameter-52mm*
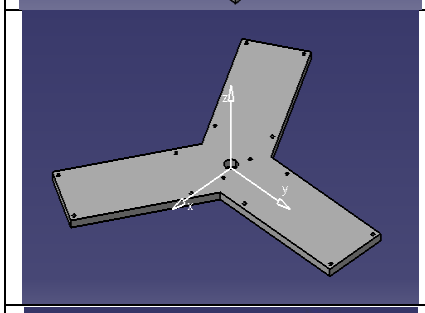	*Top Plate* *Material- Acrylic* *Thickness-6mm* *Angle Between Plates-* *120º* *Operation Performed-* *Laser Cutting, Drilling,* *Tapping*	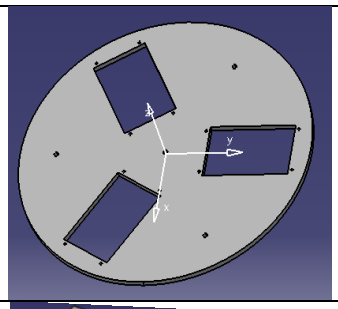	*Top Main Plate* *Material- Acrylic* *Thickness-6mm* *Diameter-320mm* *Operation Performed-* *Laser Cutting,* *Tapping,Drilling*
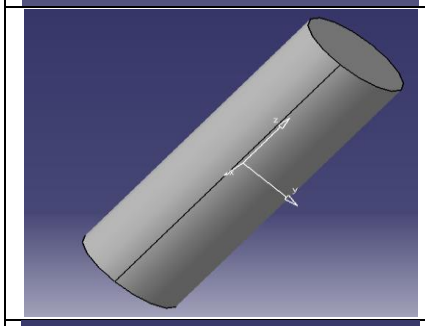	*Support Rod* *Material- Mild Steel* *Length-102mm* *Diameter-8mm*	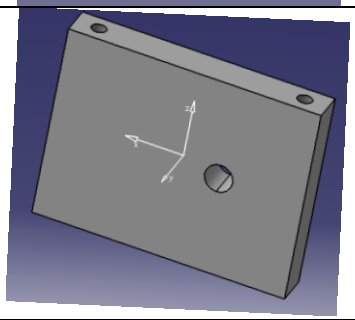	*Roller Shaft Plate* *Material- Acrylic* *Thickness-6mm* *Height-50mm* *Width-40mm* *Operation Performed-* *Laser Cutting,* *Drilling,Tapping*
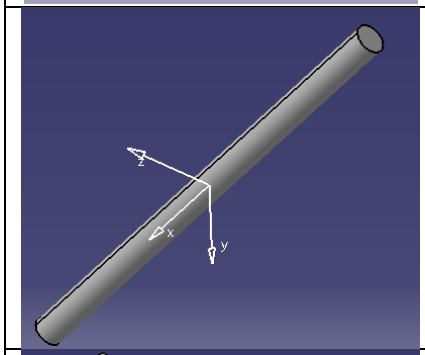	*Roller Rod* *Material- Mild Steel* *Length-102mm* *Diameter-6mm*	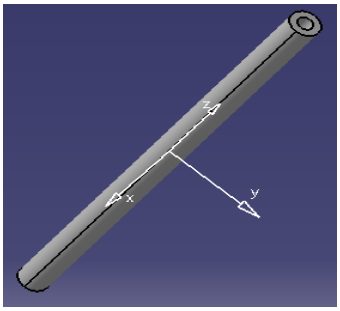	*Middle Shaft* *Material- Mild Steel* *Length-160mm* *Outer Diameter-10mm* *Internal Diameter-8mm*
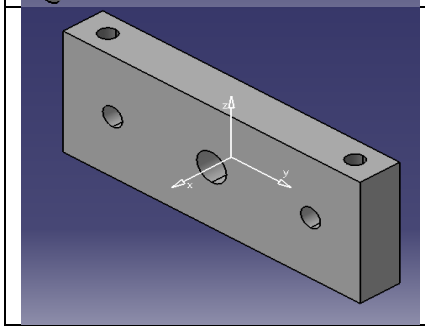	*Moving Plate* *Material- Acrylic* *Thickness-8mm* *Height-43mm* *Width-58mm* *Operation Performed-* *Laser Cutting, Drilling,* *Tapping*	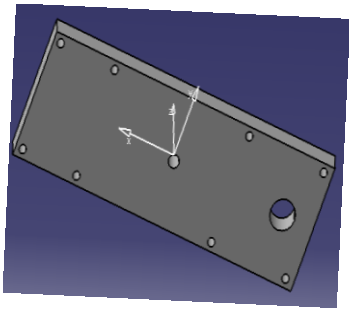	*Motor Mounting Plate* *Material- Acrylic* *Thickness-6mm* *Height-58mm* *Width-165mm* *Operation Performed-* *Laser Cutting, Drilling,* *Tapping*

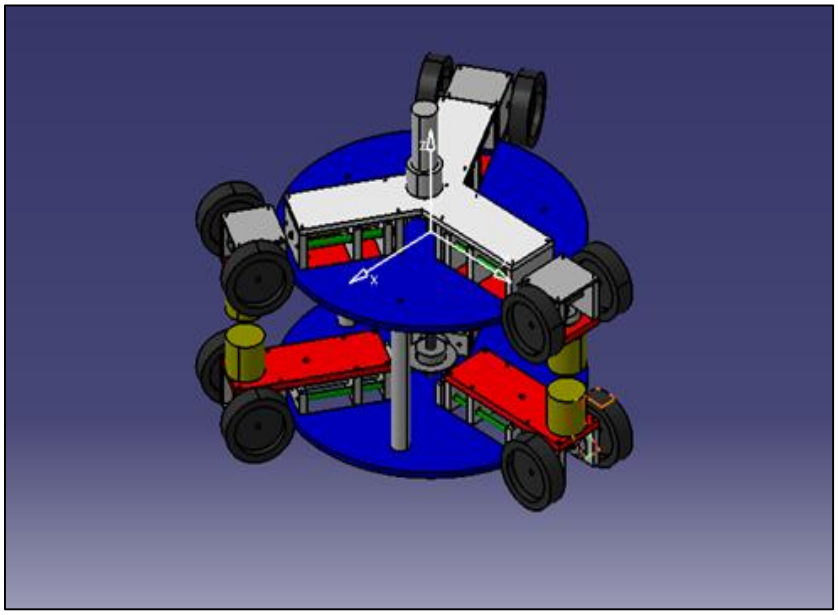

Fig. 1: Assembly of Robot

IV. ANALYSIS-DEFORMATION & STRESS

Analysis of a designed component is vital module in any product development. Here, Ansys 14.5 was used for analysis of deformation and stress concentration of various parts.

Table 2: Analysis of Deformation and stress conc.

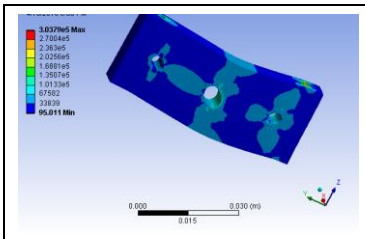	*Moving Plate* *Maximum Stress- 3.03e5 Pa* *Minimum Stress- 95.01 Pa* *Stress Applied Is Below The Permissible Stress. Hence Material Is Acceptable*	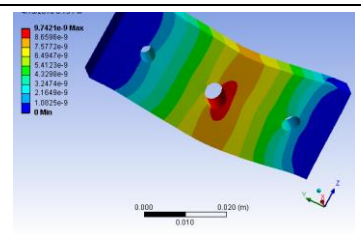	*Maximum Deformation- 9.74e-9 M* *Minimum Deformation- 0 Mm*
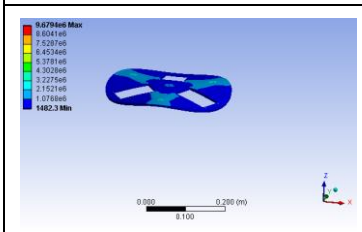	*Top Main Plate* *Maximum Stress- 9.67 E6 Pa* *Minimum Stress- 1482.3 Pa* *Stress Applied Is Below The Permissible Stress. Hence Material Is Acceptable*	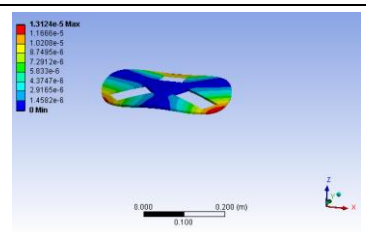	*Maximum Deformation- 1.31e-5 M* *Minimum Deformation- 0 Mm*
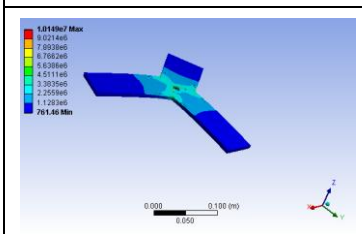	*Top Main Plate* *Maximum Stress- 1.01 E7 Pa* *Minimum Stress- 761.46 Pa* *Stress Applied Is Below The Permissible Stress. Hence Material Is Acceptable*	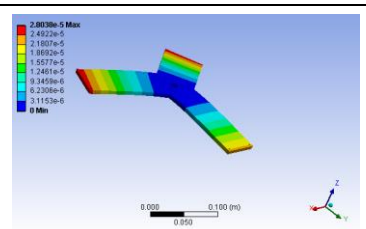	*Maximum Deformation- 2.80 E-5 M* *Minimum Deformation- 0 Mm*
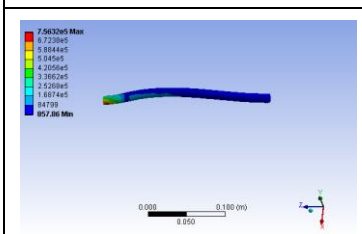	*Middle Rod* *Maximum Stress- 7.56 E5 Pa* *Minimum Stress- 857.86 Pa* *Stress Applied Is Below The Permissible Stress. Hence Material Is Acceptable*	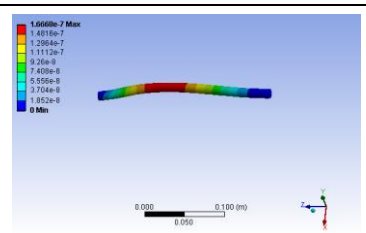	*Maximum Deformation- 1.67 E-7 M* *Minimum Deformation- 0 Mm*

V. MATERIAL

The two most commonly used materials for making the robots are

1) Acrylic

We have used acrylic for most of the robot body parts because of its following advantages over other materials.

- Acrylic is made up of lightweight, rigid thermoplastic material that has many times the breakage resistance of standard window pane glass.
- Acrylic is more impact-resistant than glass. If subjected to impact beyond the limit of its resistance, it does not shatter into small slivers but breaks into comparatively large pieces.
- Although Acrylic will expand and contract due to changes in temperature and humidity, it will not shrink with age.
- Acrylic will gradually lose tensile strength as the temperature approaches the maximum recommended for continuous service.
- Acrylic can be used at temperatures from -40°F (-40°C) up to +200°F (93°C), depending on the application.

2) Mild steel

We have used mild steel for the parts where the stress concentration is high. The mild steel provides the required strength to our robot due to its following material properties.

- The tensile strength of steel is comparatively high, making it highly resistant to fracture or breakage, which is a key point in its use in infrastructure building.
- Ductility enables steel to be used in the making of different shapes and structures ranging from thin wires or large automotive parts and panels.
- Malleability is closely linked with ductility and allows steel to be deformed under compression. It allows this alloy to be compressed into sheets of variable thicknesses, often created by hammering or rolling.
- The hardness of this alloy is high, reflecting its ability to resist strain. It is long-lasting and greatly resistant to external wear and tear. Hence, it is considered a very durable material.
- The addition of certain elements makes some types of steel resistant to rust. And Stainless steel for instance contains nickel, molybdenum, and chromium which improve its ability to resist rust.

VI. RESULTS

Table 3: For Horizontal Pipe

No.	*Distance (cm)*	*Time*	*Speed(cm/sec)*	*Mean (cm/sec)*
1	*240*	*122.3*	*1.96*	*2*
2	*240*	*119.8*	*2.01*	
3	*240*	*120.1*	*2*	

Table 4: For Vertical Pipe

No.	*Distance (cm)*	*Time(secs)*	*Speed(cm/sec)*	*Mean (cm/sec)*
1	*240*	*169.8*	*1.41*	*1.4*
2	*240*	*171.4*	*1.4*	
3	*240*	*172.5*	*1.39*	

VII. CONCLUSION

This paper proposed a mobile robot for pipeline exploration that can be used for the inspection of 16 to 20 inches' pipelines. We have also described the chuck jaw mechanism that provides for the excellent size and shape adaptability according to the diameter of the pipe in vertical as well as horizontal pipelines. Our robot is equipped with a chuck jaw mechanism system which makes it extendable for more complicated tasks and provides easily extendable interfaces in the experiments, the robot showed outstanding mobility in 16 to 20-inch pipeline layout. Mechanical design of-of all robot components is safely done. Modeling and assembly of all robot components are done on CATIA V5. Stress analysis of major components of the robot is separately carried out on ANSYS 14.5. Stress analysis results are matching with the analytical result and both values are less than permissible values. It also shows that optimization method is successfully applied to various parameters of robot .by using the chuck jaw mechanism the robot is optimally designed to crawl through the different pipe diameters smoothly which ensures the mobile stability as well as adaptability in various diameter pipes. The stresses on the parts are more when the motion of in vertical pipes and low in the horizontal pipe as it has to sustain its weight against gravity while moving in vertical pipes. This robot will reduce the human interference in the hazardous environment. It can do the pipe inspection beyond human reach.

ACKNOWLEDGMENT

It is indeed a great pleasure and moment of immense satisfaction for we to present a project report on "Design and fabrication of In-pipe inspection robot" amongst a wide panorama that provided us inspiring guidance and encouragement, we take the

opportunity to thanks to thanks those who gave us their indebted assistance. We wish to extend our cordial gratitude with profound thanks to our internal guide Prof. V. R. Kagade for his everlasting guidance. It was his inspiration and encouragement which helped us in completing our project.

Our sincere thanks and deep gratitude to Head of Department, Prof. M. M. Joshi and other faculty member; but also to all those individuals involved both directly and indirectly for their help in all aspect of the project. At last but not least we express our sincere thanks to our Institute's Principal Dr. R. S. Prasad, for providing us infrastructure and technical environment.

REFERENCES

[1] Jong-Hoon Kim, Gokarna Sharma, And S. Sitharama Iyengar "FAMPER: A Fully Autonomous Mobile Robot for Pipeline Exploration", Department of Computer Science, Louisiana, State University the USA 2010 pp 517-520

[2] Atul Gargade1, Dhanraj Tambuskar, Gajanan Thokal, "Modelling And Analysis of Pipe Inspection Robot", International Journal of Research In Engineering And Technology,2013, Pp 120-121

[3] Palwinder Kaur1, Ravinder Kaur, Gurpreet Singh, "Pipeline Inspection and Borewell Rescue Robot", International Journal of Research in Engineering and Technology,2014, Pp 726-728

[4] Nur Afiqah Binti Haji Yahya, Negin Ashrafi, Ali Hussein Humod, "Development and Adaptability of In-Pipe Inspection Robots", Department of Mechanical and Manufacturing Engineering, Faculty of Engineering, University Putra Malaysia, Malaysia, 2014, Pp 1-8

[5] Ankit Nayak Ax, S. K. Pradhan,"The Design of A New In-Pipe Inspection Robot", Twelveth Global Congress Manufacturing And Management, 2014.