Fuzzy Logic Based Power Factor Correction AC-DC Converter

Gururaj Patgar
M.E Student
Department of Electrical and Electronics Engineering
Goa College of Engineering, Farmagudi

Dr. Anant Naik
Professor
Department of Electrical and Electronics Engineering
Goa College of Engineering, Farmagudi

Abstract

A DC-link voltage is widely used in industrials and domestic's application. Simple diode rectifier's bridges are used to create dc voltage link. A diode rectifier has a high distortion input currents wave form and low power factor. A single phase AC–DC boost converter is realized to replace the conventional diode bridge rectifier. Fuzzy logic and hysteresis control techniques is implemented to improve the performance of the boost converter. The current loop is being controlled by using a PI, and hysteresis controllers. The fuzzy controller is applied to DC voltage loop circuit to get better performance. The results show that the fuzzy controller gives well controller. The controller is verified via MATLAB/Simulink.

Keywords- Power Factor Correction (PFC), Fuzzy Logic Controller (FLC), Hysteresis Controller, Boost Converter, Pi Controller

I. INTRODUCTION

DC-link voltage is widely used in many application, DC voltage is required in variable speed drives and almost of domestic electrical equipment's, it use dc voltage via diode rectifier. Generally, simple diode rectifiers bridges are used to create dc voltage link, because it is simple, cheap and robust. However, the large utilization of diode rectifiers with the rise of the big need of dc voltage in lot of applications exacerbates the problems related to the harmonic pollution in the electrical distribution systems [1]. A simple diode rectifier has a high distortion input currents wave form and low power factor.

– DC-link voltage is widely used in
1) Industrials application,
– Railway and transportation systems,
– Industrial motion control,
– Information displays,
– Factory automation and
– Power generation systems
2) Domestic's application,
– Power supplies for radio,
– Television and
– Computer equipment
– In variable speed drives and
– Almost of domestic electrical equipment

A. Advantages of Fuzzy Logic Based Power Factor Correction AC-DC Converter

– Small Distortion input currents wave form.
– Power factor near to unity.
– Controlling the output DC voltage.

II. PROPOSED SYSTEM

The single phase AC supply is fed From AC Distribution system. AC is fed to AC to DC converter to get DC voltage. And then Placed the Boost Converter in between Load and AC to DC converter. The Boost converter is controlled by pulse width modulation. By comparing the voltage and current. In Boost converter inductor maintains the inrush current, And Capacitor maintain the Voltage By controlling the gate signal of Boost converter. Fig. 1 shows the block diagram 'F'is fuzzy controller, 'H' is hysteresis controller.

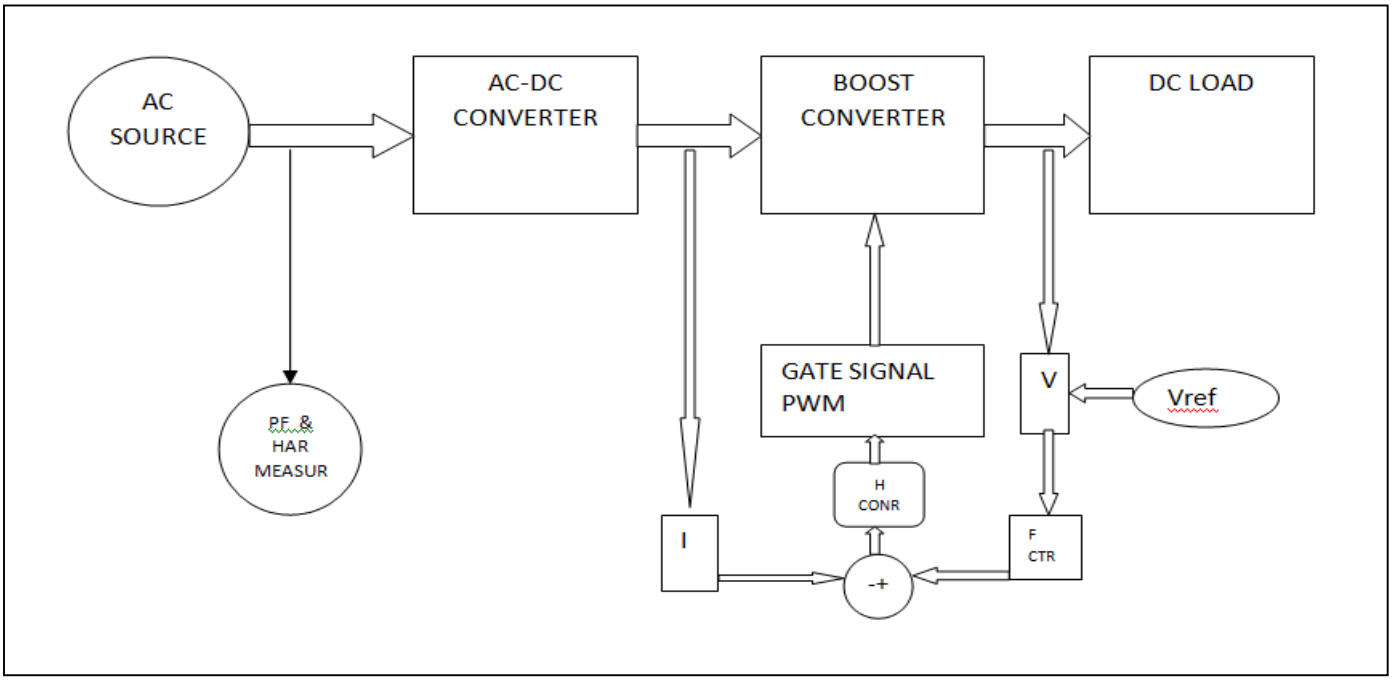

Fig. 1: Block Diagram of Proposed System

III. PROPOSED CONTROL METHOD

Fig.1 shows the single phase PFC converter, which is the simplest control scheme compared to other. The proposed controllers have been tested through MATLAB/Simulink. Track the current in the inductor to a rectified Sinusoid reference wave form and regulate the output DC voltage to reference voltage (Vo). In the boost converter fuzzy logic controller is used for the voltage loop, with the conventional hysteresis controller to improve the performance of the current loop and it doesn't need a mathematical model of the PFC converter for the controller designs. Fig. 2. Single phase AC-DC PFC boost converter control system.

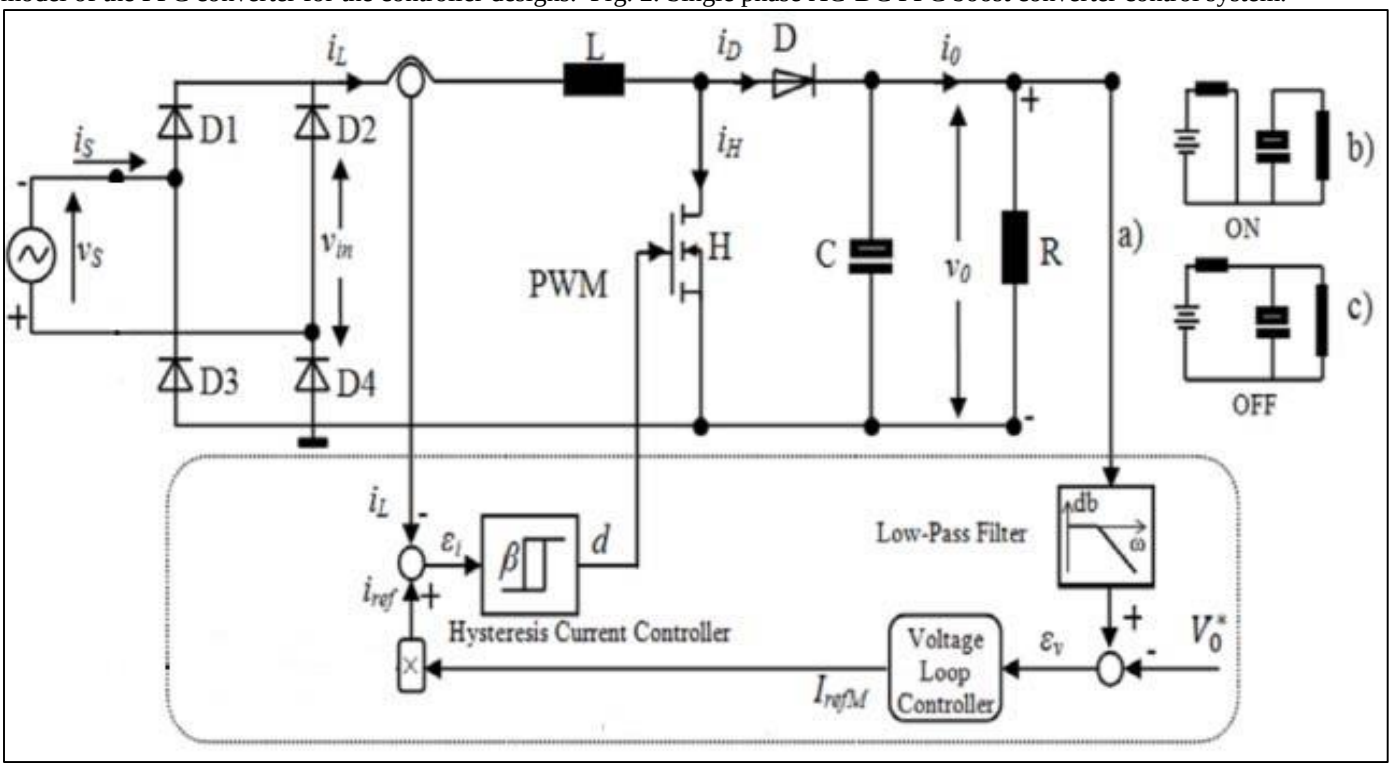

Fig. 2: (a) Single phase AC-DC PFC boost converter control system. (b)H is ON.(c) H is OFF

IV. SIMULATION

The proposed controllers have been tested through MATLAB/Simulink

Table 1: Parameters of Simulation

Parameters	*Value*
DC bus voltage	*100V*
Line inductance	*2 mH*
PFC inductance	*7mH*
DC link capacitor	*4700µF*
Load resistance	*60•*
Sampling time	*2e-5 s*

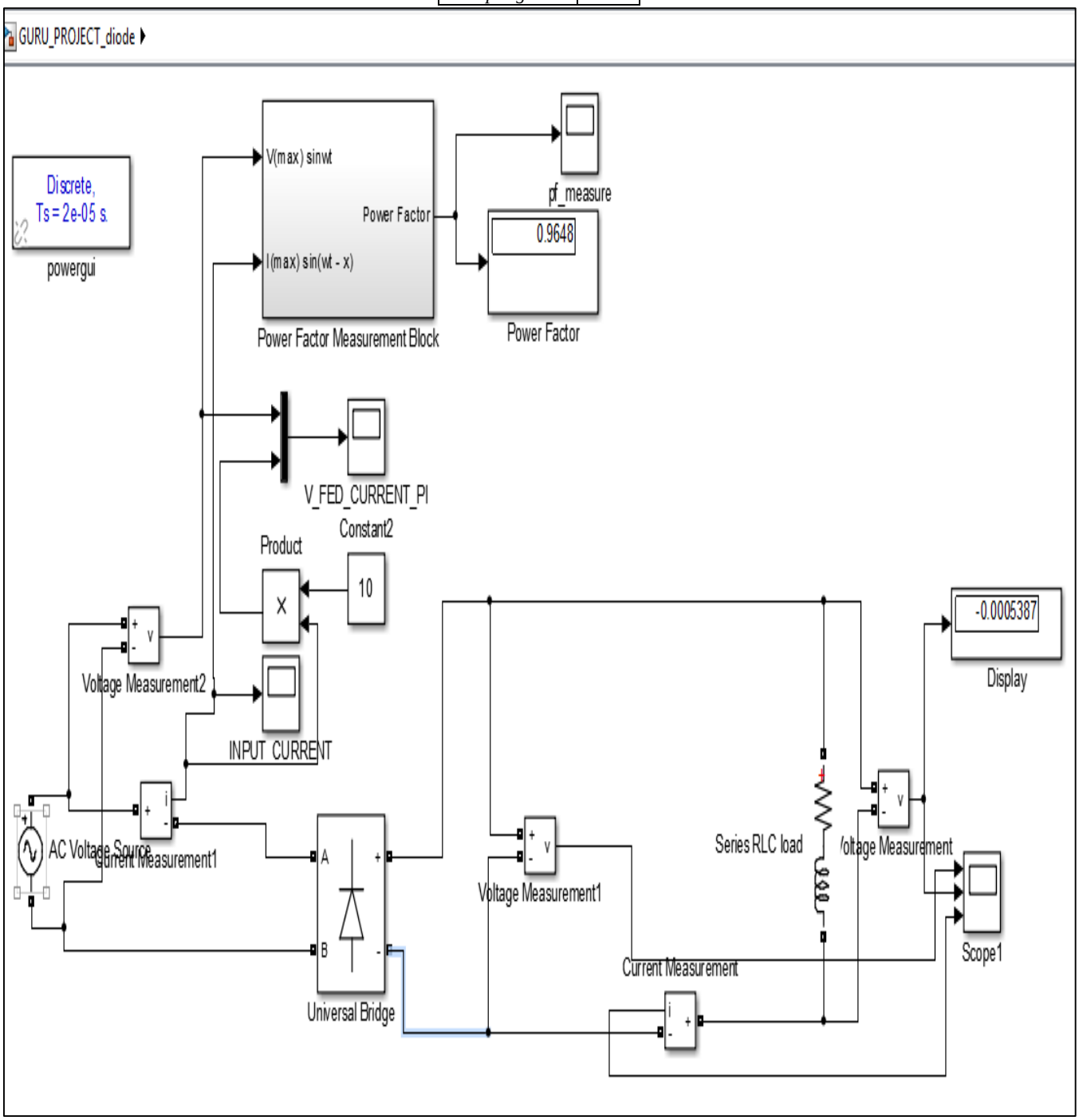

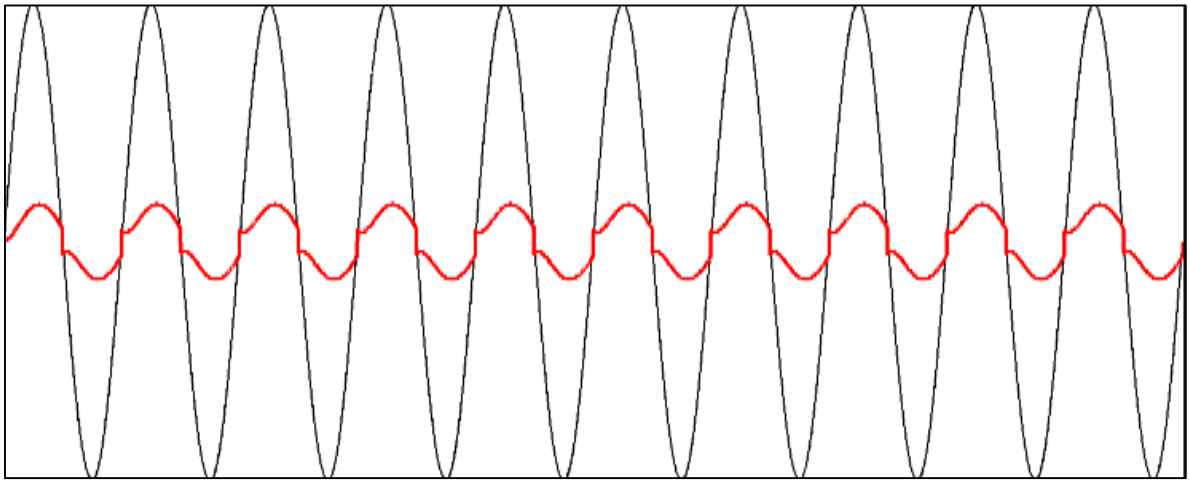

Fig. 3: Normal AD to DC converter simulation and result

Fig.3 shows the Normal AC-DC converters without using Boost converter Matlab Simulink model and simulation result of above parameters shown. Source Side Power Factor of the above Simulink model is 0.9648, and more harmonics generates at source side, this problems related to the harmonic pollution in the electrical distribution systems.

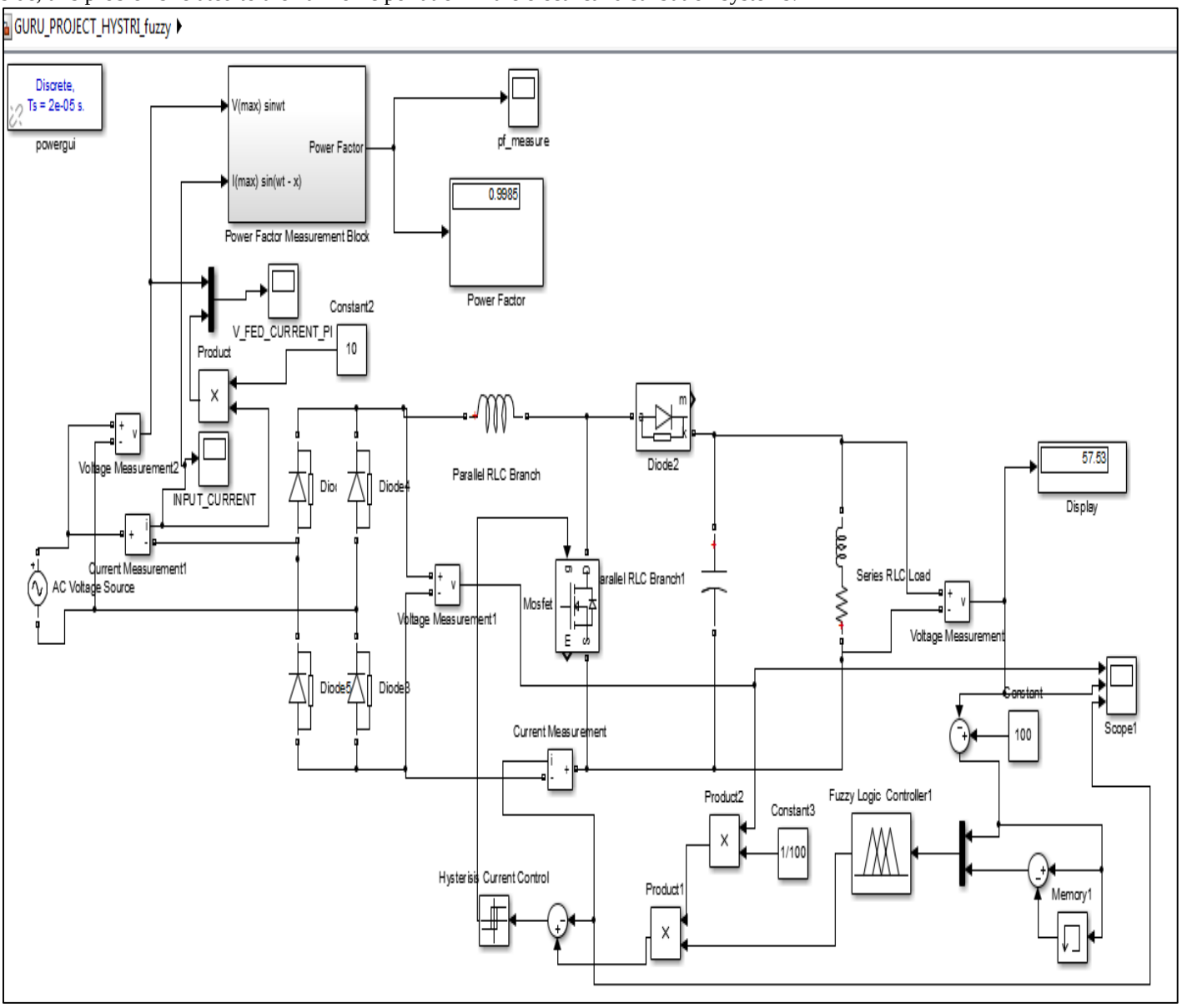

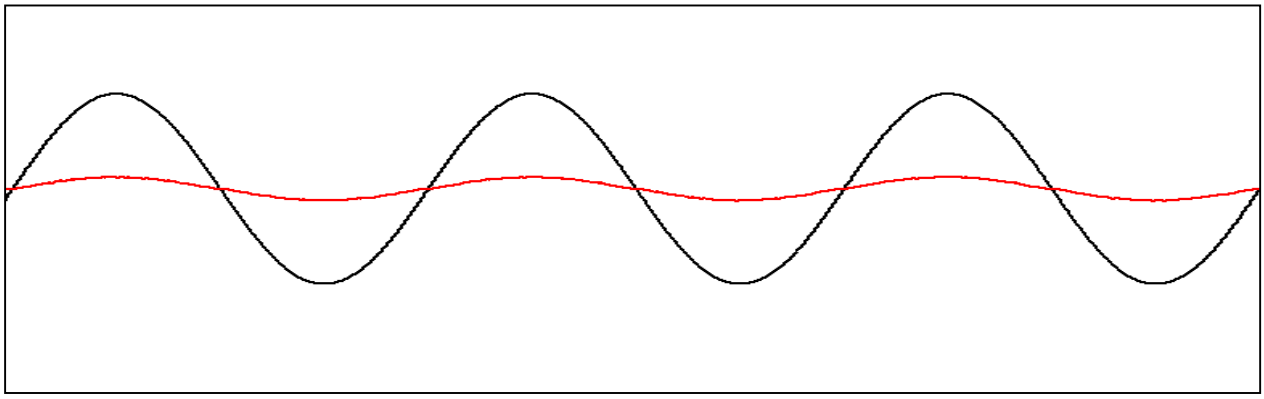

Fig. 4: Fuzzy logic Based AD to DC converter simulation and result

In fig 4 shows Fuzzy logic Based AD to DC Boost converter matlab Simulink model and output waveform as shown, in model introduce the Boost converter, by controlling the pwm signal the to improve the source side Power Factor and harmonic reduction. In feedback circuit Vout is measured and compered with Vref it gives error Voltage, this error voltage processed by fuzzy logic controller by using delay function and gave the processed current output, this processed current is subtracted to circuit current and fed to hysterics controller it is a current controller which generates pwm to MOSFET Gate drive to improve power factor and reduce the harmonics. The output of the Fuzzy controller Power factor is 0.999 and harmonics reduction (voltage and current in phase) as shown in simulation result.

Table 2: Simulation results power factor

SL.NO	*CONTROLLER*	*PF*
1	*NORMAL (AC-DC)*	*0.9648*
2	*PI-PI*	*0.9802*
3	*FUZZY LOGIC*	*0.999*

V. CONCLUSION

In this paper, a single-phase PFC converter DC voltage loop has been analyzed. The fuzzy logic controller technique is implemented to improve the performance of the PFC converter, it is robust and efficient. Matlab/Simulink has been used to simulate the proposed techniques with successful result. In the same time, high efficiency is obtained. The proposed controller applied to the unity power factor give better results a reduced harmonic distortion, and robustness control during parameter variations.

ACKNOWLEDGEMENT

The author would like to thank his guide Dr. Anant naik for his support and insights in the subject.

REFERENCES

[1] M. Malinowski, M. Jasinski, M.P. Kazmierkowski, “Simple direct power control of three-phase PWM rectifier using space-vector modulation (DPC- SVM)”, IEEE Transactions on Industrial Electronics (2004) 447–454
[2] Masashi O., Hirofumi M. “An AC/DC Converter with High Power Factor”, IEEE Transaction on Industrial Electronics, 2003, Vol 50, No. 2, pp. 356–361
[3] Kessal A, Rahmani L, Gaubert JP, Mostefai M. “Analysis and design of an isolated single-phase power factor corrector with a fast regulation”. Electr Power Syst Res 2011; 81:1825–31.
[4] Jankovskis J., Stepins D., Pikulins D. “Lowering of EMI Noise in Boost Type PFC by the use of Spread Spectrum”, Electronics and electrical Engineering. – Kaunas: Technologija, 2009, No 6(94), pp 15–18
[5] Chung HSH, Tam EPW, Hui SYR. “Development of a fuzzy logic controller for boost rectifier with active power factor correction”, In: IEEE Power Electronics Specialists Conference PESC'99, 1; 1999. p. 149–54.
[6] Jee–Woo L., Bong–Hwan K. “A Power–Factor Controller for Single Phase PWM Rectifier”, IEEE Transaction on Industrial Electronics, 1999, Vol. 46, No 5, pp 1035–1037.
[7] Kessal A, Rahmani L, Gaubert JP, Mostefai M. “Experimental design of a fuzzy controller for improving power factor of boost rectifier”. Int J Electron 2012; 99 (12):1611–21.