Electrical Parameter Control and Monitoring on PC

Keyur H. Gujjar
Student
Department of Electrical Engineering
DSTC, Junagadh, Gujarat

Khushbu R. Shayara
Student
Department of Electrical Engineering
DSTC, Junagadh, Gujarat

Rahul J. Thumar
Assistant Professor
Department of Electrical Engineering
DSTC, Junagadh, Gujarat

Ismail K. Pota
Assistant Professor
Department of Electrical Engineering
DSTC, Junagadh, Gujarat

Abstract

This assignment aims at building an efficient and automatic power survey system, which is capable of monitoring and control the electrical factors of high voltage devices, which are present in real time industrial environment. the system makes use of RS-232 based communiqué which is suitable of transferring data over longer distances the purpose of this project is to acquire the secluded real time electrical parameters like voltage, current and frequency also temperature and send these real time values over PC using USB to serial convertor the data is sense using various electrical sense and process by Micro-controller the managed data is downloaded and display on to the computer for further processing this project makes use of an onboard processor which is regularly termed as microcontroller. This on the team computer can efficiently transfer with the different sensors being used the controller is providing with some inner retention to hold the code.

Keywords- Atmega8 Microcontroller, 12-0-12 Transformer, Relay, 220uf Capacitor, USB to Serial Adapter, MOC3031 – Opt isolator

I. INTRODUCTION

Electricity is an extremely handy and useful form of energy. It plays an ever growing role in our modern industrialized society. The electrical power systems are highly non-linear, extremely huge and complex networks. Such electric power systems are unified for economic benefits, increased reliability and operational advantages. They are one of the most significant elements of both national and global infrastructure, and when these systems collapse it leads to major direct and indirect impacts on the economy and national security Electric power systems can be divided into two sub-systems, namely, transmission systems and distribution systems. The main process of a transmission system is to transfer electric power from electric generators to customer area, whereas a distribution system provides an ultimate link between high voltage transmission systems and consumer services. Supplying electricity to consumers necessitates power generation, transmission, and distribution To improve the quality of power with sufficient solutions, it is necessary to be familiar with what sort of constraint has occurred. Additionally, if there is any inadequacy in the protection, monitoring and control of a power system, the system might become unstable. Therefore, it necessitates a monitoring system that is able to automatically detect, monitor, typify and classify the existing constraints on electrical lines. This brings up advantage to both end users and utility companies. the main process of a broadcast organization is to transfer electric power from electric generators to customer area, whereas a distribution system runs an ultimate link amongst high voltage transmission systems and consumer services.[1]

Monitoring systems offers an opportunity to record each and every relevant value that is present in a local database. An effective and well-organized state of monitoring is much significant in guaranteeing the safe running of power transformers. [2]

Supplying electricity to on summers necessitates power generation, transmission, and distribution to improve the quality of power with necessary solutions, it is necessary to be familiar with what sort of constraint has occurred. Additionally, if there is any inadequacy in the protection, monitoring and control of a power system, the system might developed unstable. Consequent lit necessitates a monitoring system that is able to automatically perceive, display typify and categorize the current restraints on electrical lines this transports up advantages to both end users and utility companies. [3]

II. BLOCK DIAGRAM

In this invention microcontroller is connected to ACD, LED, LCD, Regulator and 1-phase power is given in it through this invention we can control voltage power through high or low. In this is used to reduce the high power requirement in industries by monitoring the overall parameters through a single PC with the help of bus communication. And also controls the parameters

without any manual operation. The control process will automatically take place, only if the parameter exceeds the fixed value. For an instance, the pressure is sensed by the Diaphragm, a type of transducer in the pressure sensor circuit. The sensed data is then amplified by the operational amplifiers used in the pressure sensor circuit. [4]

Here, the PIC ATmega8 A microcontroller performs various operations like converting the received analog signals into digital values with the help of in-built ADC converter, storing the data with the help of FLASH memory, etc. to monitor the sensed values through a LCD display connected with the microcontroller.

Finally, the overall parameters are monitored in a single PC with the help of serial port. If the received value in the PC exceeds the fixed value, the parameters will be automatically controlled [5]

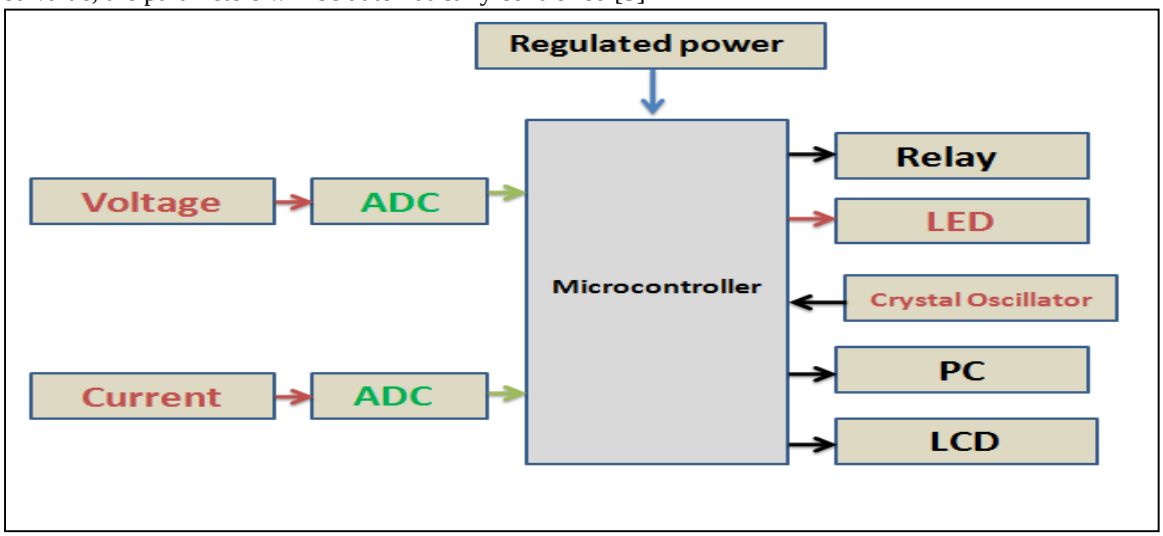

Fig. 1: Block Diagram

A. Regulated Power

- In electrical engineering, single-phase electric power is the distribution of alternating current electric power using a system in which all the voltages of the supply vary in unison. Single-phase distribution is used when loads are mostly lighting and heating, with few large electric motors. A single-phase supply connected to an alternating current electric motor does not produce a revolving magnetic field; single-phase motors need additional circuits for starting, and such motors are uncommon above 10 kW in rating.
- Single phase AC power systems peak in voltage at 90° and 270°. A cycle completes at 360°. Because of the rises and falls in voltage, power is not delivered at a constant rate.

B. Atmega8 Microcontroller

- The ATmega8 is a low-power CMOS 8-bit micro-controller based on the AVR-RISC architecture By executing powerful instructions in a single clock-cycle, the AT mega achieves through-puts approaching1 MIPS per MHz, allowing the system designed to optimize power ingesting versus processing speed.
- The Atmega8 provides the following features 8 Kbytes of In system Programmable flash with read while write capabilities 512 bytes of euro, 1 byte of ram 23 general with compare modes internal interrupts a serial programmable USART a byte oriented two wire serial interface a 6 channel ad with 10bit accuracy , a programmable watchdog timer with internal oscillator an s pi serial port and five software selectable power saving modes The idle mode stops the CPU while allowing the ram timer counters spi port and interrupts system to continue fun cottoning.

C. Crystal Oscillator

- A crystal oscillator is an electronic oscillator circuit that uses the mechanical resonance of a vibrating crystal of piezoelectric material to create an electrical signal with a precise frequency.[1] This frequency is commonly used to keep track of time, as in quartz wristwatches, to provide a stable clock signal for digital integrated circuits, and to stabilize frequencies for radio transmitters and receivers. The most common type of piezoelectric resonator used is the quartz crystal, so oscillator circuits incorporating them became known as crystal oscillators, but other piezoelectric materials including polycrystalline ceramics are used in similar circuits.

D. PC

- To display their record we connect the PC or LCD and also control the voltage and power measurement by software

*E. 16*2 Liquid Crystal Display*

– Liquid Crystal Display screen is an electronic spectacle module and find a wide range of applications. A 16x2 Liquid Crystal Display is very basic module and is very commonly used in various devices and circuits. These modules are preferred over seven segments and other multi segment LCD. The reasons being: Liquid Crystal Display are economical; easily programmable; have no limitation of displaying special& even custom characters animations and so on A 16x2Liquid Crystal Display means it can display 16 characters per line and there are 2 such positions. In this LCD each attractiveness is exhibited in 5x7 pixel environment. This Liquid Crystal Display has two registers, namely, Command and Data. The command catalog stores the command directives given to the Liquid Crystal Display. A grasp is an instruction prearranged to Liquid Crystal Display to do a predefined task like preparing it, clearing its curtain, setting the cursor place, controlling display etc. The data register stores the data to be displayed on the Liquid Crystal Display. The data is the ASCII price of the appeal to be exhibited on the Liquid Crystal Display. Snap to learn more about inside edifice.

F. Really

– Automatically operate a switch, but other operating-principles are also used, such as solid state relays. Relays are used where it is ne-peccary to regulator a trip by a separate low-power signal, or where several circuits must be control light-emitting diode by one signal. The original spreads were castoff in long distance telegraph journeys as loudspeakers: they constant the signal imminent in from one circuit and re-transmitted it on another circuit. Relays were used extensively in telephone exchanges and early computers to perform logical operations.

– A type of transmit that can handle the high power required to unswervingly control an electric motor or other loads is cal light-emitting diode a contractor. Solid-state relays control power circuits with no moving parts, instead with a semiconductor device to perform switching. Relays with calibrated operating characteristics and every now and then numerous operating coils are used to protect electrical circuits from overload or faults; in modern electric supremacy classifications these functions are performed by digital instruments-still call light.

G. Light-Emitting Diode

– A light-emitting diode is a two-lead semiconductor light source it is a p–n junction diode which the leads, electrons are able to recombine with electron fleabags within the ruse, releasing energy the form of photons. This effect is a light-emitting diode electroluminescence, and the color in of the light (corresponding to the energy of the photon) is dogged by the energy band gap of the semiconductor LED is often small in area(less than) and integrated optical components may be used to An shape its radiation pattern Appearing as practical electronic components in 1962, the earliest emitted low intensity infrared light. Infrared LEDs are still frequently used as transmitting elements in remote-control circuits, such as those in remote controls for a wide variety of consumer electronics The first visible-light LED were aloof low intensity, and limited to red. Modern LED are available across the visible, ultraviolet, and infrared wavelengths, with very high brightness. Early LED was often used as gauge table lamp for electronic devices, replacing small incandescent bulbs. They were soon bundled into numeric information in the form of seven-segment displays, and were commonly seen in digital clocks.

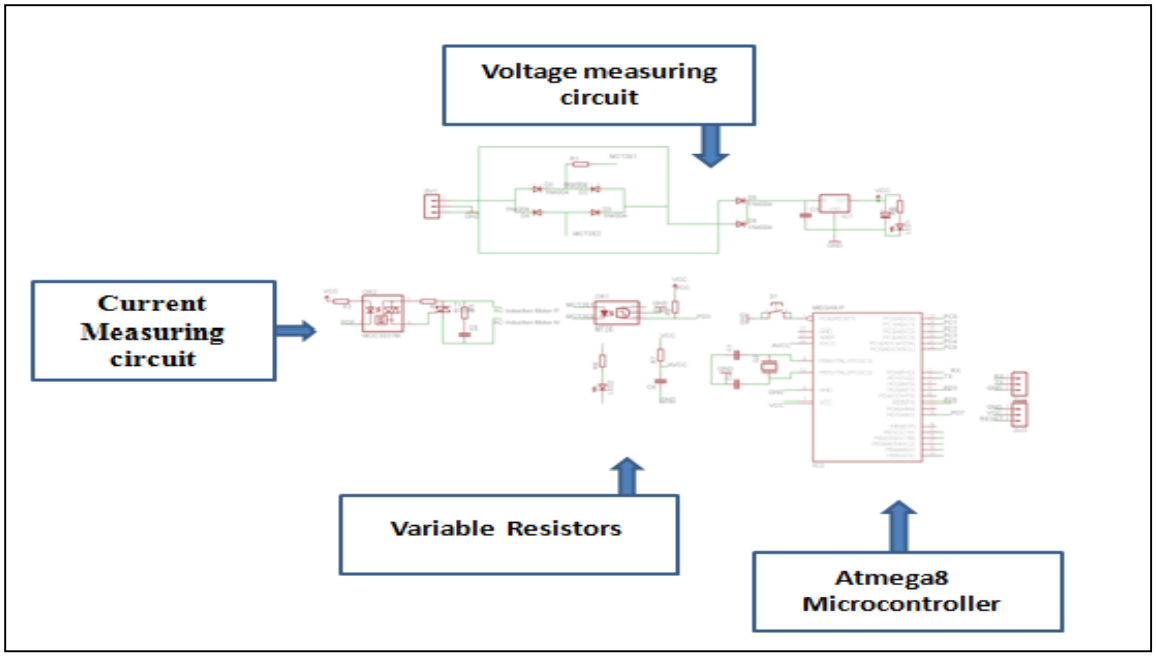

Fig. 2: Schematic Diagram

H. Voltage Measuring Circuit

- The designed voltage measuring circuit is shown in Fig 230/7.5-0-7.5V transformer is used to step down the input voltage, which is then rectified using a bridge rectifier. The dc output from bridge circuit is applied to potential divider to circuit to produce the required input voltage. It is designed to produce an output voltage of 2.14V for 230V input.

I. Current Measuring Circuit

- The designed current measuring circuit is shown in Fig.A current transformer is used to convert the input current to a suitable voltage, which is then rectified using bridge rectifier. The obtained dc voltage is applied to a potential divider circuit to produce the required input. The circuit is designed to measure current in the range of 0-10A. The circuit is designed to produce an output voltage of 4.2V for 10A input.

J. Variable Resistors

1) What is a Variable Resistor?

- A variable resistor is a device that is used to change the resistance according to our needs in an electronic circuit. It can be used as a three terminal as well as a two terminal device. Mostly they are used as a three terminal device. Variable resistors are mostly used for device calibration.

2) Working of Variable Resistor

- As shown in the diagram below, a variable resistor consists of a track which provides the resistance path. Two terminals of the device are connected to both the ends of the track. The third terminal is connected to a wiper that decides the motion of the track. The motion of the wiper through the track helps in increasing and decreasing the resistance.

III. RESULT

- The power supply from the main line of 240v transformer to 12-0-12 transformer and then this transformer convert the power into ac to ac and generate the 12v of power.
- By help of 7805ic these 12v can converted into 5v.Therefore the 5v can work on main circuit by dc to dc converter.
- To display their record we connect the pc or lcd and also control the voltage and power measurement by software
- Microcontroller are used to control electric parameter like voltage and current and used of this microcontroller are connect to the pc and the software in this pc can control the current and voltage and measuring it.

ACKNOWLEDGEMENT

Dissertation work. Apart from resources he also motivates with a deep sense of gratitude and respect, we would like to extend our thanks to Prof. Rahul J. Thumar for their kind attention and guidance which have made the Project successful. We would like to express my heartfelt gratitude to Prof. M. M. Desai (H.O.D, Electrical Engineering department) to provide us full support in utilizing the lab resources to perform our and inspires us to keep our performance standard as maximum as possible. We are also thankful to my family and friends for their support during this project work.

IV. CONCLUSION

By this project we can conclude that we don't need and physical presence to monitor electrical parameters we can record this parameters and analyze them at our convenience time. For the monitoring and control system, the development of MTLAB for microcontrollers and Visual Basic for monitoring the temperature, pressure through PC are achieved. This system also provided the automatic control of industrial parameters using CAN bus application.

REFERENCES

[1] Jyotishman Pathak, Yuan Li, Vasant Honavar and James D. McCalley, "A Service-Oriented Architecture for Electric Power Transmission System Asset Management", In ICSOC Workshops, pp: 26-37, 2006.
[2] B. A. Carreras, V. E. Lynch, D. E. Newman and I. Dobson, "Blackout Mitigation Assessment in Power Transmission Systems", Hawaii International Conference on System Science, January 2003.
[3] Daponte, M. Di Penta and G.Mercurio,"TRANSIENTMETER: A Distributed Measurement System for Power Quality Monitoring", IEEE Transactions on Power Delivery, Vol. 19, Issue. 2, pp: 456-463, 2004.
[4] Jyotishman Pathak, Yuan Li, Vasant Honavar and James D. McCalley, "A Service-Oriented Architecture for Electric Power Transmission System Asset Management", In ICSOC Workshops, pp: 26-37, 2006.
[5] Xiaomeng Li and Ganesh K. Venayagamoorthy, "A Neural Network Based Wide Area Monitor for a Power System", IEEE Power Engineering Society General Meeting, Vol. 2, pp: 1455-1460, 2005.