Design and Analysis of Electromagnetic Disc Brake for Automobiles

Abhijeet N. Naikwadi
UG Student
Department of Mechanical Engineering
NBN SSOE Savitribai Phule Pune University

Janak S. Patil
UG Student
Department of Mechanical Engineering
NBN SSOE Savitribai Phule Pune University

Omkar S. Mohite
UG Student
Department of Mechanical Engineering
NBN SSOE Savitribai Phule Pune University

Shubham A. Mokal
UG Student
Department of Mechanical Engineering
NBN SSOE Savitribai Phule Pune University

Prof. V. R. Kagade
Assistant Professor
Department of Mechanical Engineering
NBN SSOE Savitribai Phule Pune University

Abstract

The design of an electromagnetic disc brake requires a multidisciplinary approach. Its performance is an outcome of usage of concepts from various fields' viz. mechanical, electrical, magnetic and material engineering. This paper describes a new type of electromagnetic disc brake for retarding the motion of a vehicle. In this study, a comprehensive design procedure for electromagnetic disc brake is presented to ensure maximum efficiency along with effective braking. Varied magnetic materials are discussed in terms of minimizing the cost while meeting electromagnetic performance characteristics. An analytical model is developed to optimize braking effort with combination of input current and voltage using sensors and voltage regulator, wear and tear of brakes, maintenance. Calibration between spring expansion (output) and source voltage (input) is derived for prompt operation of the brakes. Also, structural analysis of nodal forces on the cross-structure and brake disc is also carried out to ensure reliability. The analytical results so obtained are within the acceptable range for braking.

Keywords- Electromagnetic brakes, Solenoidal force, Cross-structure, Brake disc, Structural analysis, EMDB

I. INTRODUCTION

On reviewing the multiple accidents caused by brake failure in automobile, it was to use a different yet safely engineered method over the usual conventional methods of braking (drum brake, air brake, hydraulic brake). It was seen that electromagnetic brakes have been used extensively in different segments as retarders but has not been used for automobile braking and ours is a genuine effort to bring this technology in all automobile segments.

These type of brakes can be applied to all automobiles with minor changes as per required by the company, especially in trucks where brake failure is a common phenomenon. Electromagnetic brakes can also be used in escalators and elevators where immediate yet retarded braking is required.

II. METHODOLOGY

The basic principle used here is electromagnetic induction, which means when a coil is wound around metallic material and current is made to pass through it, it causes the metallic object to act like a magnet and stops being a magnet as soon as the current stops. This method is used to stop the rotating ferromagnetic disc and application of axial force from the pressing friction pads mounted on the electromagnetic structure.

Conventional hydraulic disc brakes require long tedious fluid lines that not only increase complexity but also increase maintenance cost & leakage problems but now in the design introduced, electromagnets will completely eliminate the fluid lines & related drawbacks.

Existing EMBs have abrupt & sudden braking of the shaft which leads to considerable intensity of jerk produced but our design promises smooth retardation of the shaft using potentiometer (current/voltage controller). Existing brakes require complete pedal displacement i.e. maximum braking effort but our design includes potentiometer & pedal position sensor which ensures minimum requirement of braking effort from user for the same amount of braking force.

III. DESIGN- CAD 3D MODELS

A. Design of Casing

The primitive purpose of casing is to prevent dirt, dust particulates from entering the system. And to prevent magnetic particles from getting attracted to the electromagnets. Furthermore, dowel pins were welded on to the face of casing using controlled atmosphere for the purpose of guide way for the cross-structure. Nevertheless, it also housed tiny slots for the fitment of the springs.

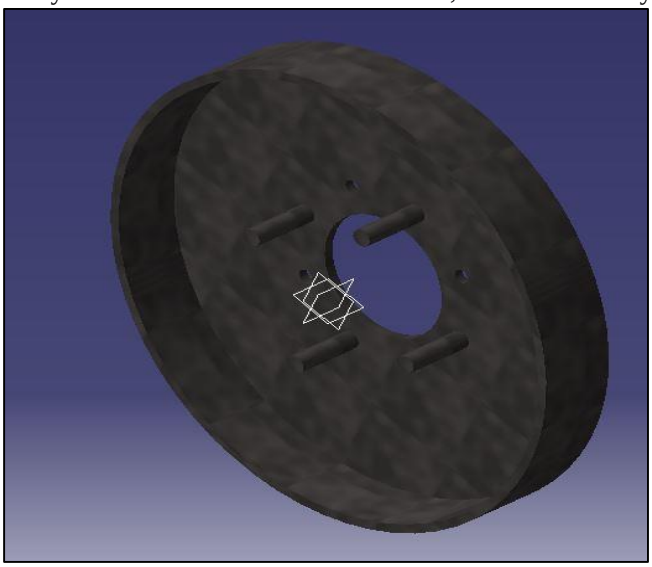

Fig. 1: Outer Casing

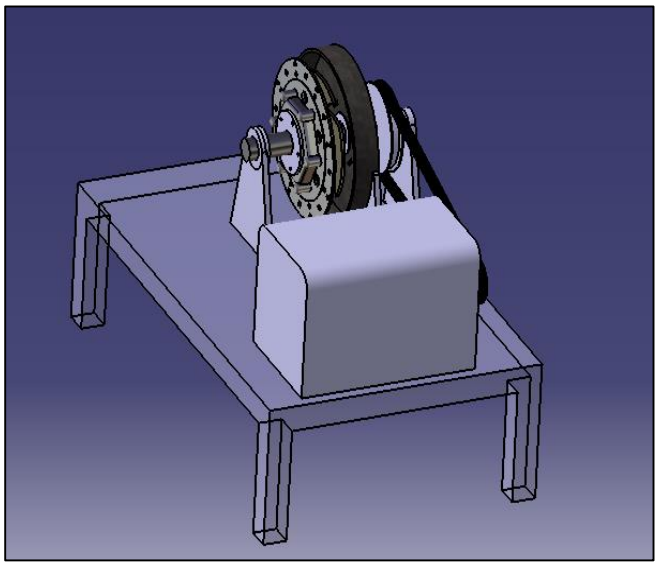

Fig. 2: Assembly

B. Design of Cross-Structure

The design of cross-structure possesses blade like structure owing to the proper fitment of the electromagnets between the blades, thus catalyzing effective magnetic force from the electromagnets. Also, asbestos friction lining material is glued to the face of cross-structure.

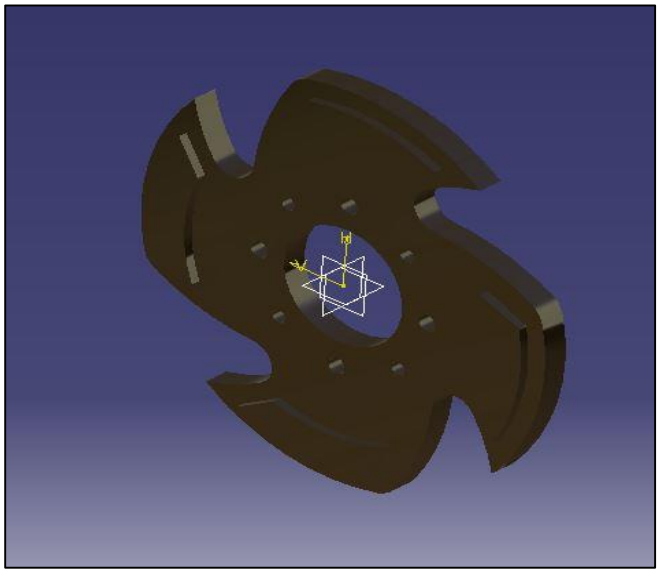

Fig. 3: Cross-Structure

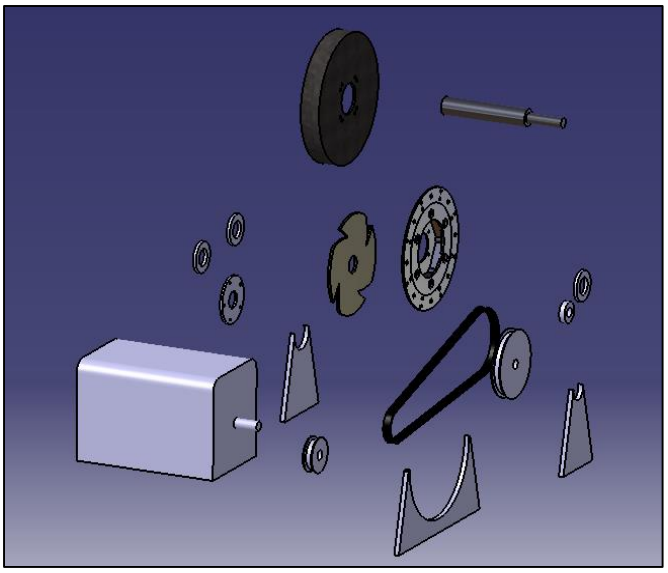

Fig. 4: Exploded View

IV. DESIGN- CALCULATIONS

A. Calculation of Braking Forces, Normal Force, Work Done & Braking Torque

Assume,
(Vehicle considered Hyundai i10)
Initial velocity of a vehicle (u) = 80kmph (22.22m/s^2)
Final velocity of a vehicle (v) = 0 kmph ------ [complete braking of vehicle is considered]
Mass of the vehicle=1040kg

1) Work Done (W_R)

The work done is calculated in context of displacement of the specimen vehicle from one place to another, here the energy conservation principle is used to calculate the resultant work done.
In physics, the law of conservation of energy states that the total energy of an isolated system remains constant, it is said to be conserved over time.

$W_R = W_{final} - W_{initial}$

Where,

W_R = Resultant work done
W_{final} = Final work done

$W_{initial}$=Initial work done

Now,

$W_R = (0.5 * m * v^2) – (0.5 * m * u^2)$ --------- (as, v=0)

$W_R = – 0.5 * m * u^2$

$W_R = – 0.5 * (312) * (22.22)^2$

$W_R = – 77021.63J$ or $77.021KJ$ (↓)

2) Normal Force (F_N)

Consider bearing pressure exerted onto the periphery of disc by friction pads as,

$P_b = F_N$ / C.S area

As, P_b = 1MPa

Area=$2 * 10^{-3}$ m^2

Therefore,

$1 * 10^6 = F_N / (2 * 10^{-3})$

$F_N = 10^6 * 2 * 10^{-3}$

$F_N = 2 * 10^3$ N

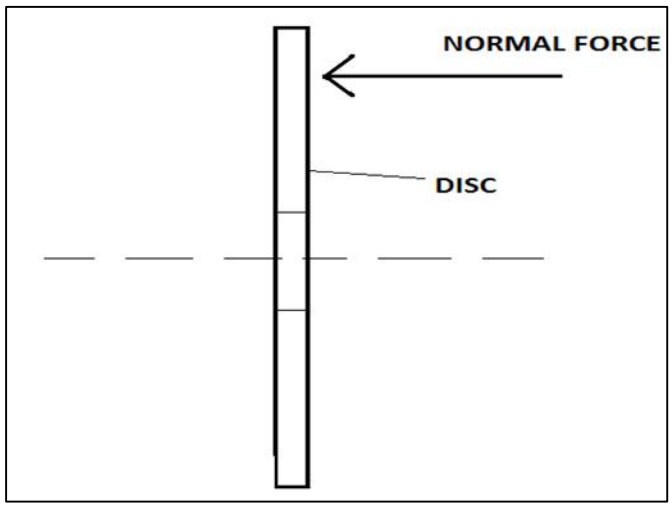

Fig. 5: Normal Force

3) Braking Force (F_B)

Braking force is a force required to decelerate a moving vehicle or stopping its motion. Braking force is always tangential to the wheel of the vehicle. This force is opposite to the direction of the motion of vehicle and depends on the frictional co-efficient between the wheel and the ground and normal reaction from the ground. Higher the frictional co-efficient, higher is the braking force.

The normal reaction on the wheel is one of the key factors to consider for varying the braking force because the braking force mainly depends on the coefficient of friction between the tyre and the ground and normal reaction on the wheel. Consider a free body diagram of the wheel which is shown in figure.

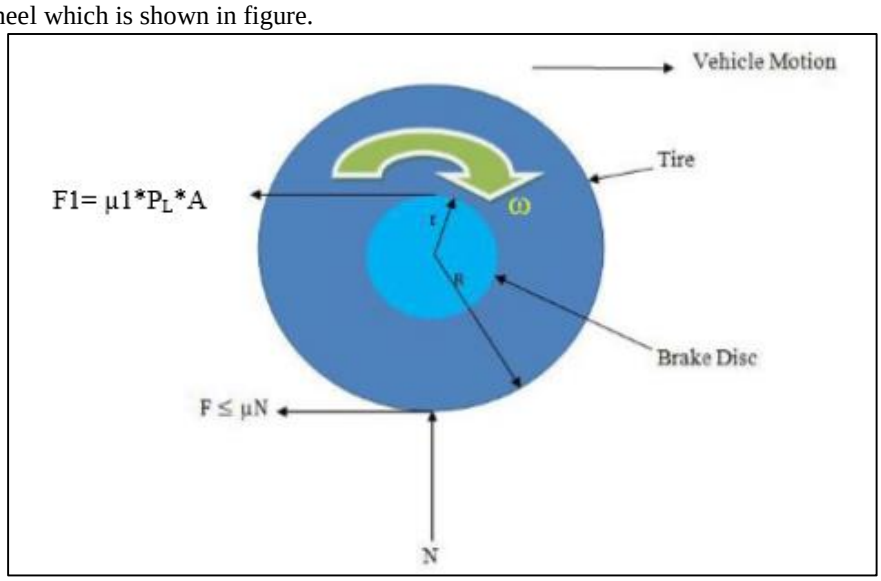

Fig. 6: Braking Force

$F_B = \mu * F_N$
$F_B = 0.35 * 2 * 10^3$
$F_B = 0.7 * 10^3$ N

4) Braking Torque (T_B)

Braking torque is a force applied at the brake wheel to stop the motion of the moving vehicle. Assuming the operating conditions for the vehicle are constant, a brake having retarding torque equal to full load torque of the motor to which it is applied is usually satisfactory.

Considering that friction pads will be active along radial distance of 100mm,

$T_B = F_B * r$
$= 0.7 * 10^3 * 0.1$
$T_B = 70$ N-m

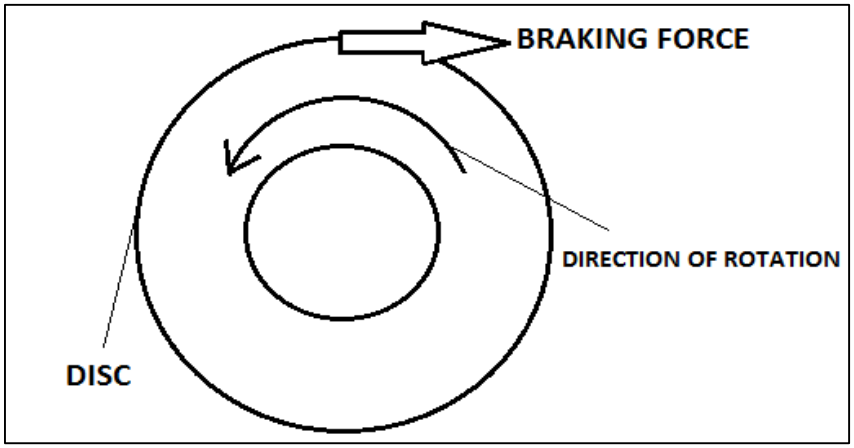

Fig. 7: Structural Diagram of Force

5) Stopping Distance of the Vehicle (X_s)

Stopping distances include the distance travelled while the driver notices a hazard and applies the brakes (thinking distance), and while the vehicle comes to a full stop from its initial speed (braking distance). The government's official estimates of stopping distances for cars are shown below.

MAKE/MODEL	DISTANCE (m)	SOURCE
Alfa MITO	37.61	Motor Magazine (Aust)
Alfa Giulietta QV	37.80	Motor Magazine (Aust)
Audi A5 Sportsback	37.62	Motor Magazine (Aust)
BMW 123D Hatch	37.95	Motor Magazine (Aust)
BMW 330D Coupe	36.63	Motor Magazine (Aust)
Chrysler 300C	38.72	Motor Magazine (Aust)
Holden VE Commodore SV6	39.86	Motor Magazine (Aust)
HSV GXP	37.76	Motor Magazine (Aust)
HSV GTS (WP tuned - 2011)	38.31	Motor Magazine (Aust)
Nissan GTR (R35 - 2011)	32.75	Motor Magazine (Aust)
Porsche 911 Turbo S (2011)	39.62	Motor Magazine (Aust)
Renault Megane RS250	36.34	Motor Magazine (Aust)
Renault RS Clio 200	36.43	Motor Magazine (Aust)
Subaru Impreza WRX	37.38	Motor Magazine (Aust)
Suzuki Alto	43.56	Motor Magazine (Aust)
W Golf GTD	37.58	Motor Magazine (Aust)
VW Golf R	39.57	Motor Magazine (Aust)
VW Golf GTI	39.36	Motor Magazine (Aust)
Volvo C30 TS	39.05	Motor Magazine (Aust)

Fig. 8: Stopping Distance Reference Chart

Considering energy conservation principle,
Work done due to = Work done due to
Braking force kinetic energy

$F_t * x_s * \mu = 0.5 * m * u^2$

$2 * 10^3 * x_s * 0.35 = 77021.63$

$x_s = 27.458$ m

6) No. of Rotations of Wheel (Rpm)

**Assume speed of vehicle to be 60 kmph.*

Thus, V=60kmph= 60*1000/3600 = 16.67m/s

V= w*r

Where,

V = velocity of vehicle
w= angular velocity
r= radius of tyre
16.67= 2ΠN*0.9/60
N=176.84rpm

7) Calculations for spring

Springs are elastic bodies made up of considerable ductile material and are used to retention of original state; a spring is an elastic object used to store mechanical energy. Springs are usually made out of spring steel. There are a large number of spring designs; in everyday usage the term often refers to coil springs. Types of springs: Tension, Compression, Torsion etc.

Tension springs are used in the design to remunerate the working of cross structure.

(Assume displacement of spring to be 5mm)

Considering retraction force of spring is to be 10N

Therefore,

F= K*x

Where,

F=retraction force
K= stiffness of spring
x=displacement of spring in mm
10=K*5
K=2 N/mm

8) Solenoid calculations

Solenoids is used in electromagnets and according to the design considerations, an electromagnet worth 505 N magnetic force was required. Therefore, a OEMs electromagnet was purchased pertaining to similar specifications.

Solenoid Force Calculator				
I (Current In Amps.)	0.33	(A)		
N	48500	(turns)		
A	78.5	(Length units^2)		
g	5	(Length units)		
Results				
Compute				
F	505.383	(N)	113.615	(LBS)

Fig. 9: Solenoid Force Calculator

V. ANALYSIS-DEFORMATION & STRESS

Analysis of a designed component is vital module in any product development. Here, Ansys 15.0 was used for analysis of deformation and stress concentration of brake disc. During working of the EMDB it was observed that the brake disc was subjected to torsional stresses that might fail the brake disc by inducing progression of cracks. Also, accumulation of torsional as well as residual stresses at a particular node i.e. stress concentration might prove fatal for operation of the disc brake. Hence here stress analysis proved judgmental.

Analysis was done following construction of the geometry, applying material, fine meshing of the component for more accurate results, extraction of viable data and relatable solution.

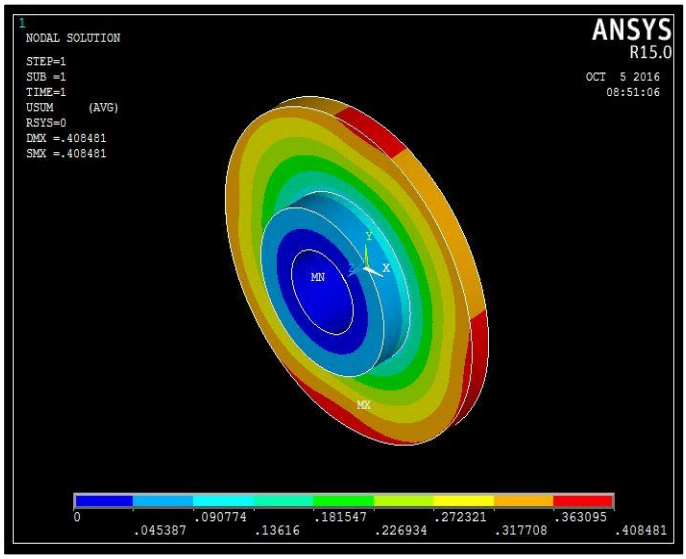

Fig. 10: Deformation of Brake Disc

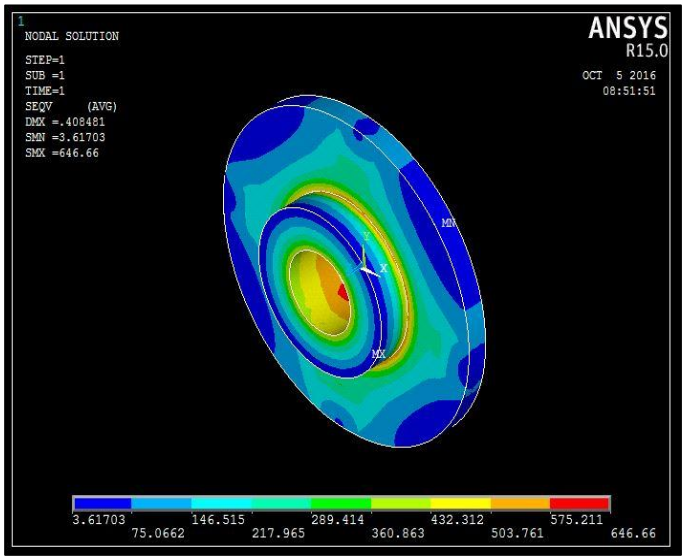

Fig. 11: Stress on Brake Disc

VI. CONSTRUCTION

Major components that define the design includes outer casing, cross structure, custom brake disc, motor shaft, friction pads, tension springs, electromagnets, A.C Induction motor, foundation, power distributor unit, pedal position sensor, potentiometer etc.

The outer casing acts as robust structural component which protects the inner components from dirt, dust, grease, ferric particles etc. Electromagnets are mounted on the cross structure using radial slots. Power supply to all the electromagnets is provided using 12V DC, 1.3A-hr Li-Ion battery. Four friction pads of asbestos are mounted on the cross structure in the provided slots. Now, the cross structure is mounted on the outer casing using springs. Dowels are used as guide ways for lateral movement of the cross structure. All the components are now assembled and are mounted on the shaft with 10microns press fit without any lateral offset.

The assembled shaft is connected to power drive using step down pulley and V-belt which in turn derives its power from 1HP 1440rpm A.C Induction motor. Furthermore, the disc is designed in such a way that radial slots are provided on its crown for better vortex flow of air over the disc for better heat dissipation. Also, radial slots are drilled over its flat surface for the same.

Complete assembly viz. shaft assembly, motor and pulley are mounted on the foundation fabricated from 1.5”x1.5”x5mm M.S angle bar. Now, the wheel and rim is mounted on the M12 threaded screws provided on the disc and tightened using J-spanner.

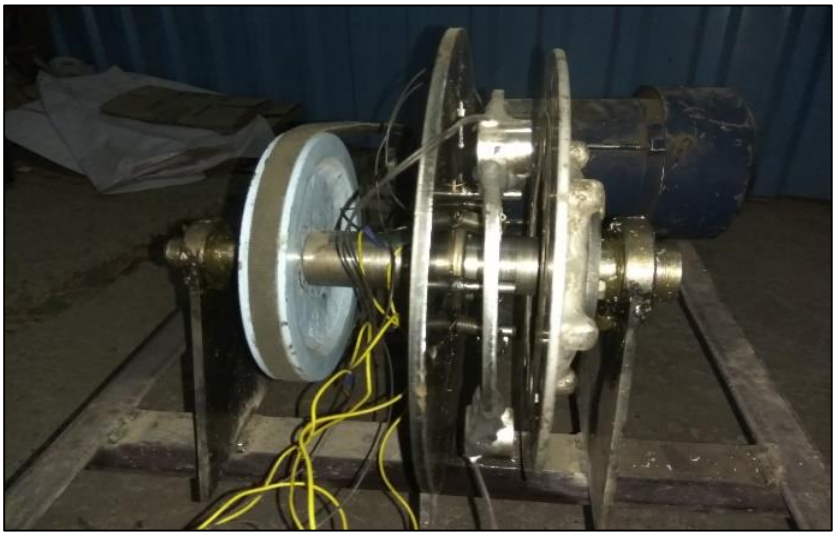

Fig. 12: Actual Assembly (Side View)

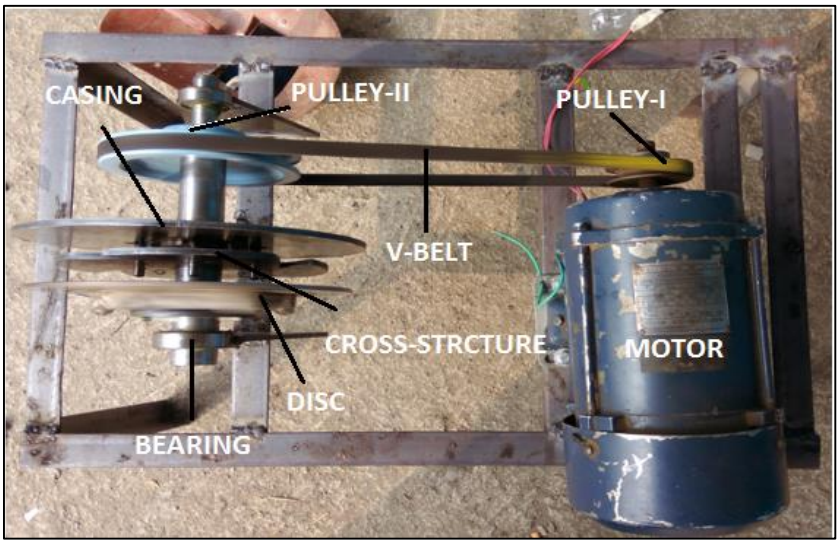

Fig. 13: Actual Assembly (Top View)

VII. WORKING

As discussed earlier, the principle of our design is completely based on electromagnetic induction, the working is as follows:

- When the driver senses the need of braking and presses the brake pedal, the pedal position sensor senses the amount of angular deflection of brake pedal and sends the exact amount of current to the potentiometer which is the principle part in actuating the electromagnet and thus it gets actuated.
- In order for the vehicle to decelerate, it is not fundamental that the friction pads wear out on the disc because the electromagnet produces magnetic attraction which ensures speed reduction of the shaft.
- Now, as the driver increases effort on the brake pedal, more amount of current is sent to the electromagnet and now the cross structure which is mounted on the casing using helical springs gets attracted towards the ferromagnetic disc thus the asbestos brake pads are applied onto the disc thus reducing the speed of the shaft. Here, in the design, both the electromagnetic force and the friction wear help in braking of the vehicle.

VIII. MAINTENANCE

- Due to prolong use of brake pads, they get worn out due to frictional wear and hence need to be replaced periodically. We have provided attached for the brake pads so that they can be replaced easily.
- On the other hand, electromagnets should be replaced if decrease in braking performance is encountered. Even they can be replaced along with brake pads without replacing the cross structure. They are unit components.

– If excessive braking is performed even after brake pads wear out, the brake disc gets circular indentation onto its flat surface which results in altered performance of the braking.
– Also in any case, if deformation is observed on the cross structure then the same should be replaced immediately to avoid uninterrupted braking performance.

IX. CONCLUSION

– Advantages of EMDB are:
1) Elimination long and complicated fluid lines.
2) Reduced maintenance cost (grease, braking fluid, master cylinder, line splitter, pipe seals, calipers)
3) Reduced braking effort.
4) Reduced working temperature due to minimum wear and tear.
– Dis-advantages of EMDB are:
1) Over-heating of electromagnets due to excessive current.
2) Power supply connections to electromagnet may get hampered.
– Applications:
1) Commercial and domestic elevators.
2) Escalators used in malls, large storeyed buildings & offices.
3) Earth movers like bull dozers, cranes, forklifts, road roller, tower cranes, breakers, tractors.
4) Wheel balancing machines.
5) Trains, metros, tram-trains, cable vans.
6) Large conveyors in packaging industries.
7) Robotic, medical, material handling, military, production machinery, medical-rehabilitation (wheel chairs), mining industry, textile industry, automatic control engineering & machine tool production machinery.
8) Cement mixers, sand/stone crushers.
9) High speed pumps, compressors, turbines.

ACKNOWLEDGEMENT

The authors sincerely acknowledge the technical support and co-operation of Prof. V. R. Kagade, Prof. Y. G. Gawale and Prof. R. K. Nanwatkar of Sinhgad Institutes, Savitribai Phule Pune University, and Pune.

REFERENCES

Basic
[1] Yusuf Yasa, Eyyup Sincarb, Baris Tugrul Ertugrulb, Erkan Mesec published -A multidisciplinary design approach for electromagnetic brakes- published on 21st July 2016.
[2] Ali Belhocine, Mostefa Bouchetara published- Investigation of temperature and thermal stress in ventilated disc brake based on 3D thermo-mechanical coupling model- published on 17 August 2012.

Book References
[3] Swapnil R. Abhang, D.P. Bhaskar-Design and Analysis of Disc Brake published on Feb 2014.
[4] V.B. Bhandari – Design of machine elements.
[5] Ramaruthan – Strength of materials.
[6] G Lakshmi Narasaiah – Finite Element Analysis
[7] Wayne Goddard, Stuart Melville – Research methodology.
[8] Yogesh Kumar Singh – Fundamentals of research methodology & statistics.

Website References
[9] http://www.nhai.gov.in
[10] http://www.daycounter.com/Calculators/Magnets/Solenoid-Force-Calculator.phtml