An Optimal Scheme for Minimizing Energy Consumption in WSN

Kajal
Student
Department of Computer Science & Engineering
JMIT Radaur, Haryana, India

Nitin Goyal
Assistant Professor
Department of Computer Science & Engineering
JMIT Radaur, Haryana, India

Abstract

Deployment, coverage and energy efficiency are the main goals set in wireless sensor network. The network constituted by the small sensor nodes having the three main tasks of sensing, data processing and forwarding with the aim to reach base station. The base station works as the sink for the data which is generated by the sensor nodes in case of wireless sensor networks. The sensor networks have the limited battery supply for the use in sensor nodes. Each node can transmit data in its communication range. The communication range can be affected with the change in battery utilization. In this paper, the main focus is shifted to deployment, coverage and energy aware operation methodology which in term help to increase the efficiency of the overall network. The network resulted in the higher performance parameters. Obtaining optimal results remain the objective of the work throughout the process of simulation undertaken.

Keywords- Wireless sensor network, Coverage, Energy aware, Hierarchical routing protocol

I. INTRODUCTION

Distributed nature, autonomous in nature, high number of nodes, resource constraints are the features those describes the Wireless Sensor network. Sensors small enough to the size of the coin have the communication capabilities and can transmit data in accordance with the network. By the nature of these networks the challenges faced includes lifetime, data processing, coverage, utilization of the resources. Absence of any of the topology and randomly distributed nature which scatters the wireless nodes all over the network, makes it more challenging to preserve the network energy long enough the satisfy the network deployment objectives. Network coverage meaning in this case changes slightly from its main meaning understood in general terms. As the wireless sensor networks follow the hierarchical communication strategies which in fact provides the best performing networks, the coverage deal directly with the area covered by the various cluster heads (CH) to the total area of the wireless sensor network. In this paper, an energy aware, optimal and efficient wireless sensor network scheme is proposed so that the network lifetime, coverage and utilization of the various resources can be increased.

Low Energy Adaptive Clustering Hierarchal (LEACH) provides the basis for most of the modern protocols designed for the wireless sensor networks. It introduced the concept of CH election, CH is chosen from the nodes of the network which would be responsible for the data collection from the nodes which comes under it for the sole purpose of communication and provides the data forwarding to the next CH using the data forwarding capability of that node and the intermediate nodes working as CH can participate in the process of communication.

The Nodes having less energy level join clusters based on their distances to the closest CH. They directly send their data packets to the corresponding CH for communication. LEACH protocol performs the data communication task in the form of rounds. Rounds are the process which involves two phases: 1) Setup phase 2) Steady phase. First of these include the selection of CHs. CSMA advertisement messages for utilized for nomination purpose of CHs. The CH denoted in the literature as CH. Second one constituted by the aggregation, compression and transmission processes. A percentage denoted by “P” CHs is selected. In selection process it is taken care of that only live node can be selected as CHs and should satisfy the condition that they do not take responsibility of being CH in previous 1/P rounds. All these parameters are put in formula designed for CH selection and denoted by T (n).

With the advantage of LEACH protocol for prolonging the network lifetime in comparison with other routing strategies of plane multi-hop routing and static routing it also lacks on various parameters of performance. While selection of CHs it is possible to have two or more in the very close range as it does not take care of the position in the area of the CH. Further an optimal number for CHs and distribution over the area will be optimal is not guaranteed. Multiple CHs residing in the close range results in greater energy loss. Nodes will be on same priority irrespective of their residual energy until the cluster election process resulting in the choice of incorrect node as CH and the node chosen incorrectly dies due to energy consumption. Other big drawback comes from the communication model in which the CH works in the single hop mode resulting in direct connection of the CH to the base station. Single hop mode limits the LEACH from being a candidate protocol for large-scale wireless sensor network. Another assumption which affects the leach performance is uniform distribution of sensor nodes over region which is not feasible in various applications of wireless sensor networks. In real time applications by the CH election

sometimes more number of nodes naturally come under one CH and less goes for the other. This condition breaks the assumption of having homogeneous in nature. Greater the number of nodes under particular node, greater is the data to be sent to base station and greater amount of energy consumed in the process resulting in loss of some nodes quickly in the network. Another big point comes in the restriction of being the CH until the passage of 1/P rounds. This point of selection process becomes a big cause in loss of chances to potential nodes that may have a high residual energy and it could be previously worked as CH [1-10].

II. LITERATURE SURVEY

In [11], a density control algorithm for WSN to decrease the number of active sensor nodes to keep a linked coverage over a precise area of interest. In this approach, the inactive nodes can be kept in sleeping state to reduce the energy consumption. It does not need any of sensing or ranging information of sensors. It requires every active node to generate two packets known as beacons for unlike communication ranges. Sensor nodes then decide to be active or inactive according to information arriving in beacon packets. In [12], GSTEB (General Self-Organized Tree Based Energy-Balance Routing Protocol) , which uses routing tree model for the routing purposes. GSTEB maintain the routing tree which has the root selected by the base station and the base station is responsible for the broadcast to other nodes of the network the information about the root of the tree. All other nodes, select their respective parents by some criteria.

In [13], the focus of the work is to maximize the network lifetime while providing the necessary coverage and connectivity in the sensor networks. To achieve the maximization of lifetime, static nodes are deployed in random manner in the area for the purpose of sensing coverage to a set of locations in the region, which are known as target points; these sensing points are responsible for the communication setup in active sensors. Sensors have independent sensing, transmission range with no relation between the two parameters. Node activation schedule is followed in which the mutual exclusive sets of nodes are activated in succession to have the maximum utilization of the residual energy of the nodes. Firstly the problem is formulated with the help of Linear Programming techniques, resulting in efficient performance of the network in the simulation scenarios.

In[14], the advantages and objectives of clustering for WSNs are outlined and a new classification of WSN clustering routing protocols is proposed. The analysis of a few widely used and discussed protocols is done along with their comparison and the summarization of all this work is done. In [15], the work focuses on the local sensing based on two radii optimization schemes base on the one-hop approximation of Delaunay Triangulation to reduce the utilization of energy and extension of network lifetime. The complete coverage and radii assignment is done by using traditional Delaunay Triangulation. In [16], energy efficient routing scheme divide the sensor nodes to several scheduling sets and these sets are responsible for the effective communication of the network. This approach provides the flexibility of having some nodes in sleep state, while going for the selection of after that sensor to forward the information to the distance from the base station and its current energy level is considered. This distributes the network power consumption among sensors. As the energy level changes the scheduling sets are automatically generated to fulfill the required task.

In [17], Energy awareness, coverage preservance hierarchal clustering and routing model based on particle swarm optimization algorithm. The main consideration devotes to energy-aware and coverage preservance hierarchal clustering. Model proposed optimizes the WSN by selecting the best fitting nodes assigned as CHs. The resulting mechanism minimizes the nodes consumed energy by minimizing the active CHs while the higher percentages of the covered nodes are preserved. By extending the lifetime functional reliability is achieved. In [18], the sensing field is considered of arbitrary shape by introducing the obstacles. Relationship between communication range and sensing range is set. To achieve further communication goals sensing field is divided into sub-regions based on the shape of the field, and then sensors are deployed in these sub regions. This scheme reduces the number of sensor required to cover a particular area.

III. METHODOLOGY

A. Network Model

For the proposed protocol following network assumptions are considered:

- All sensor nodes are homogenous.
- All nodes are stationary once deployed in the field and have location information.
- There is single base station located outside the field.
- The nodes are considered to die only when their energy is exhausted.

In wireless sensor networks, nodes are deployed randomly, i.e. positions of nodes are not pre-engineered. Most of the energy of nodes is dissipated due to communication between two nodes and it depends on the distance between them. Both sending and receiving of data consumes energy. Energy dissipation model is shown in Fig. 1 and explained next.

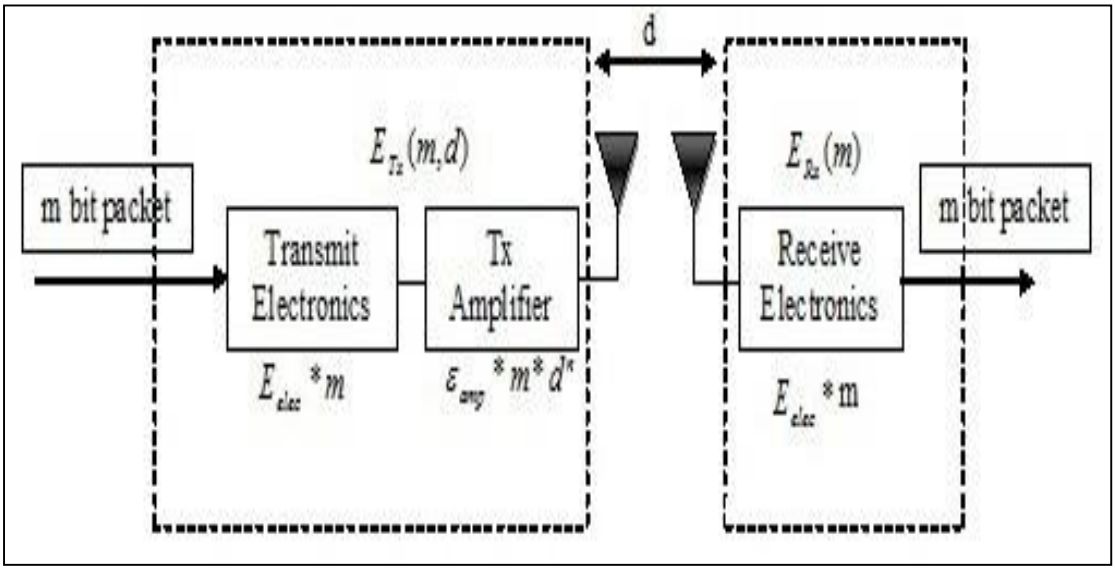

Fig. 1: Radio Energy Model

For sending m bit data over a distance d, the total energy consumed by a node is as follows:

$$ET\ x(m, d) = ET\ x{-}elec(m) + ET\ x{-}amp(m, d) \quad (1)$$

$$ET\ x(m,d) = m \times Eelec + (m \times Ef\ s \times d2)\ d < dcrossover\ m \times Eelec + (m \times Eamp \times d4)\ d \geq dcrossover \quad (2)$$

Where dcrossoveris crossover distance, while the energy consumption for receiving that message is given by:

$$ERx(m) = m \times Eelec \quad (3)$$

Considered network model for proposed scheme assumes energy required for running the transmitter and receiver electronic circuitry Eelecas 50nJ/bit and for acceptable SNR required energy for transmitter amplifier for free space propagation Ef s as 100pJ/bit/m2 and for two rays ground Eampas 0.0013pJ/bit/m4. The crossover distance dcrossoveris considered 87m.

IV. PROPOSED PSO BASED CLUSTERING

A. Particle Swarm Optimization Overview

Particle Swarm Optimization (PSO) can be referred to asa random optimization technique based on population and was devised by Kennedy and Eberhart in 1995 [19]. They have developed PSO through the inspiration of social behavior of fish schooling or bird flocking. They have demonstrated solution to a problem of complex non-linear optimization by means of imitating the bird flocks' behavior. Also they have devised the function-optimization concept from a specificswarm.PSO can be referred as a computational technique that Optimizes an issue by using a series of iterations attempting to enhance a candidate solution regarding given quality measure or application. PSO generally optimizes an issue based on candidate population in the search-space in conformity with the mathematical formulae over velocity and position of the particle. In each iteration, velocity of each particle is updated using the current velocity of the particle and the previouslocal_bestand global_best position [20]–[21]. Based on it,new_velocity, new_positionof the particle can be estimated. The same procedure is repeated for each iteration.

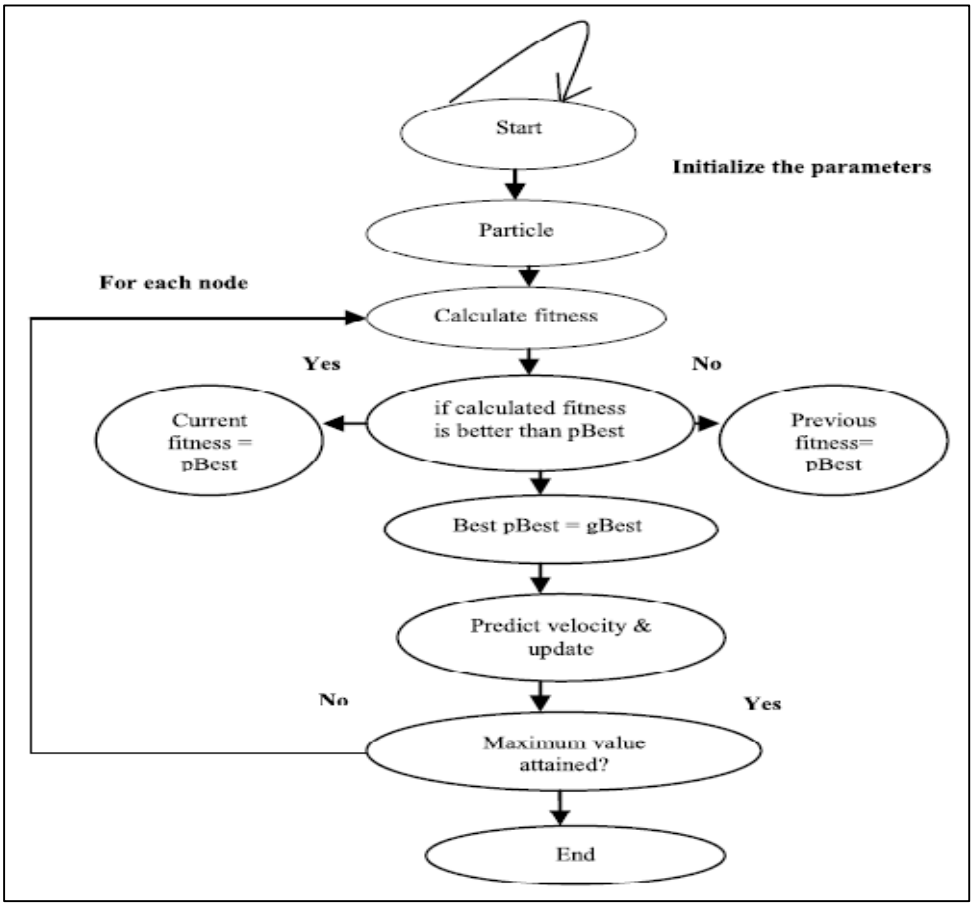

Fig. 2: State machine diagram of PSO algorithm.

V. SIMULATION

MATLAB is used for carried research as simulation tool. A homogenous WSN deployment was used to generate the sensing area coverage with the sensor nodes.

Network Model

- The area in which deployment is done is 100X100 m^2.
- Static deployment strategy is used to make the region homogenous in terms of node deployment.
- Nodes characteristics are fixed in their capabilities of sensing.
- All CHs; the data reduction is done by using data aggregation.
- Nodes communicate on the standard communication parameters.
- Base station is fixed and is situated at the centre of the field.

B. Energy Model

- E_o is the initial energy set for each node.
- Transmission, Reception, Data forwarding, Data aggregation all these involve either the communication processes or computation tasks so energy is consumed in all these tasks.
- To get the Network total energy the residual energy of all the nodes are summarized to get the total network energy at a particular time.

C. CH Selection

- CH is chosen by having the fittest node in the selection.

D. Cluster Formation

- Cluster formation aims to maximize the covered area while maintaining the minimum possible number of active CHs.
- The nodes find their closest CH and set that as their CH.

E. Data Transmission

- Each CH receives data from all of its cluster nodes.

– CH heads are responsible for the entire process of data forwarding, communication, and data computations.
– Nodes die only when they are out of energy.

F. Standard Energy Model Parameters

Parameter	*Value*
Initial Energy	*0.5 J/node*
Minimum Energy	*0.0001J*
Energy required for transmission	*50nJ/bit*
Energy required for reception	*50nJ/bit*
Energy required for aggregation	*50nJ/bit*
$d<=d_o$(forwarding)	*10pJ/bit/m^2*
$d>=d_o$(Amplification)	*0.0013pJ/bit/m^4*
Threshold set	*0.1 of nodes (alive)*

VI. RESULTS

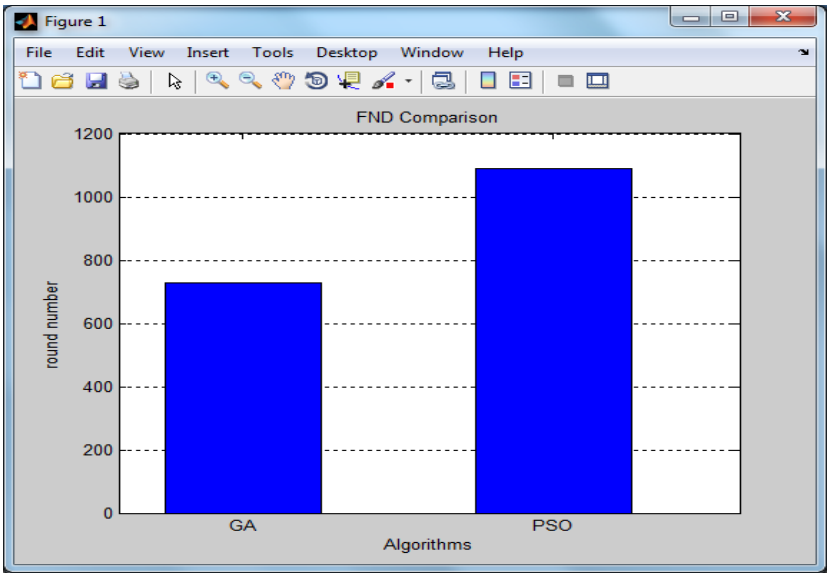

Fig. 3: Full Node Dead Comparison

Energy consumption by the network is calculated by summarizing the network nodes residual energy and getting it plotted against the number of rounds of the network provides the outlook of energy requirement of the network at any stage. Reduction in energy requirement for the network directly communicates the network efficiency.

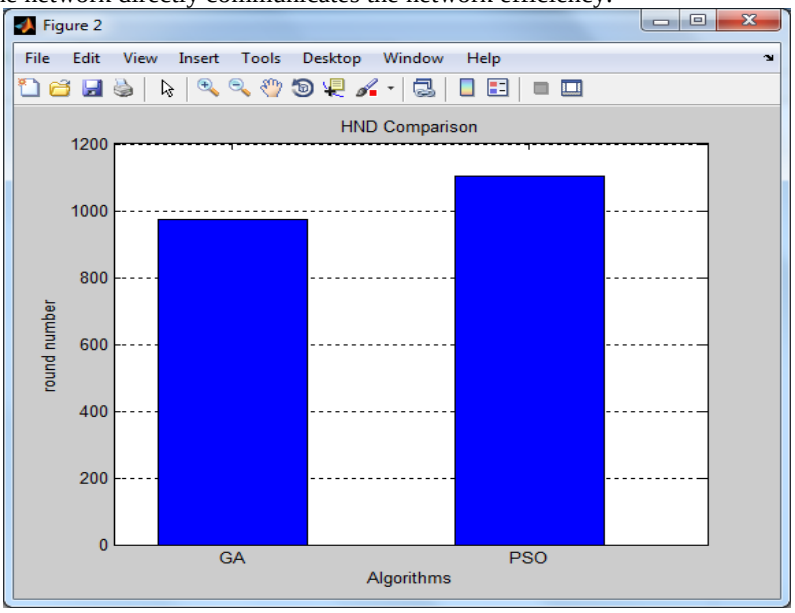

Fig. 4: Half Node Dead Comparison

Number of packets to CHs is the total number of packets generated by the sensing nodes to get the area coverage of the network. The network coverage is extended when the data communication is present for a longer time period in the network.

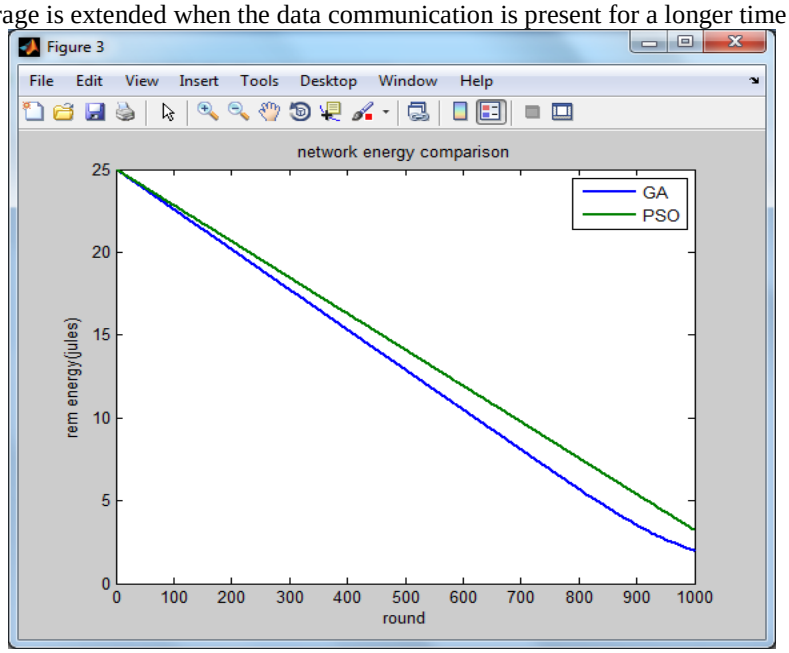

Fig. 5: Comparison of Energy Consumption

Packets are generated by the sensing nodes and these packets are sent to the CHs. The CHs aggregate the data and makes this as a single packet to forward to the base station. The energy consumption in different rounds by the CHs is shown in Fig3.

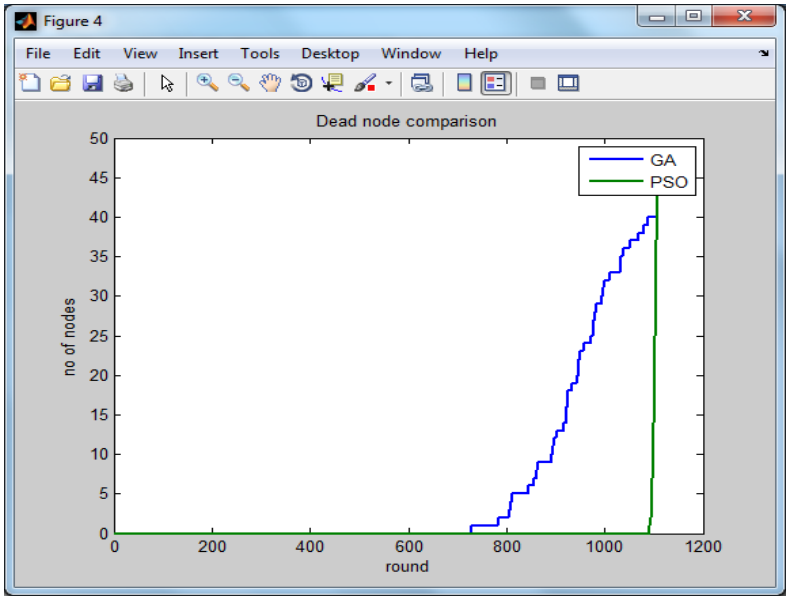

Fig. 6: Number of Dead Nodes

When the network node's energy reaches its minimal levels, it will be unable to communicate further or it is unavailable to take part in any of the communication process or in the CH selection process due to its minimum or no residual energy present for performing any activity. The activities thus cannot be performed by these nodes and they are treated as Dead node. Even if dead node may have some residual energy but with time it approaches to zero without participating in any of the communication process.

VII. CONCLUSION

The proposed algorithm has shown a significant improvement over the experimented protocol and taken as the base for the work undertaken. The difference among existing protocols and proposed algorithm include proposed algorithm keep track of the energy consumption and the coverage in the network and the selection is done to have the best results for the given scenario. As

the network time increases the coverage and the transmissions provided by the network are among the cases which cover the maximum space and area and provide the all direction network optimization.

REFERENCES

[1] NitinGoyal, AlkaGaba, "A New Approach of Location Aided Routing Protocol Using Minimum Bandwidth in Mobile Ad-Hoc Network", International Journal of Computer Technology & Applications, Vol. 4, No. 4, pp. 653-659, July 2013.
[2] NitinGoyal, AlkaGaba, "A review over MANET-Issues and Challenges", International Journal of Enhanced Research in Management & Computer Applications, Vol. 2, Issue 4, pp. 16-28, April-2013.
[3] TanujaKhurana, Sukhvir Singh, NitinGoyal, "An Evaluation of Ad-hoc Routing Protocols for Wireless Sensor Networks", International Journal of Advanced Research in Computer Science and Electronics Engineering, Vol. 1 , Issue 5, July 2012.
[4] NitinGoyal, Maynak Dave, Anil Kumar Verma, "Fuzzy Based Clustering and Aggregation Technique for Under Water Wireless Sensor Networks", International Conference on Electronics and Communication System (ICECS-2014), Feb 2014.
[5] Harpreet Chawla, Nitin Goyal, "Quality of Service and Scalability in Vehicular Ad Hoc Networks", International Journal of Engineering Research and General Science, Vol. 3, Issue 3, May-June, 2015.
[6] AlkaGaba, Nitin Goyal, "Review over Diverse Location Aided Routing", Global Journal for Current Engineering Research, Vol. 2, No. 2, pp. 141-144, 2013.
[7] Mohit Kumar, Nitin Goyal, "Reviewing Underwater Acoustic Wireless Sensing Networks", International Journal of Computer Science and Technology, Vol. 5, Issue 2, June 2014.
[8] Pratibha Kamboj, Nitin Goyal, "Survey of Various Keys Management Techniques in MANET", International Journal of Emerging Research in Management & Technology, Vol. 4, Issue 6, June 2015.
[9] Radhika Chauhan, Nitin Goyal, "A Review on Tuning Of OLSR Routing Protocol IN VANET", International Journal of Advanced Research and Innovative Ideas in Education, Vol. 2 , Issue 2, pp. 508-512, May 2016.
[10] Nitin Goyal, Mayank Dave, Anil Kumar Verma, "Energy Efficient Architecture for Intra and Inter Cluster Communication for Underwater Wireless Sensor Networks", Wireless Personal Communications, SPRINGER, pp 1-21, April 2016, DOI: 10.1007/s11277-016-3302-0. ISSN: 0929-6212
[11] Jehn-Ruey Jiang and Tzu-Ming Sung, "Energy-Efficient Coverage and Connectivity Maintenance for Wireless Sensor Networks", Journal of Networks, Vol 4, No 6 (2009), 403-410, Aug 2009
[12] Palak Agrawal, P.R. Pardhi, "Routing Protocols For WSN", International Journal of Computer Science and Applications, Vol. 8, No. 1, Jan-Mar 2015.
[13] NeerajJaggi and Alhussein A. Abouzeid , "Energy-Efficient Connected Coverage in Wireless Sensor Networks", The Forth Asia International Mobile Computing Conf. 2006.
[14] Xuxun Liu, "A Survey on Clustering Routing Protocols in Wireless Sensor Network", Sensors 2012, 12, 11113-11153; doi:10.3390/s120811113
[15] Wang, Jiong, and SirishaMedidi. "Energy efficient coverage with variable sensing radii in wireless sensor networks" Wireless and Mobile Computing, Networking and Communications, 2007. WiMOB 2007. Third IEEE International Conference on. IEEE, 2007.
[16] Dong, Yuping, et al. "An energy conserving routing algorithm for wireless sensor networks." International Journal of Future Generation Communication and Networking 4.1 (2011): 39-53.
[17] Sharawi, Marwa, et al. "WSN's energy-aware coverage preserving optimization model based on multi-objective bat algorithm." Evolutionary Computation (CEC), 2015 IEEE Congress on. IEEE, 2015.
[18] Wang, You-Chiun, Chun-Chi Hu, and Yu-Chee Tseng. "Efficient deployment algorithms for ensuring coverage and connectivity of wireless sensor networks." Wireless Internet, 2005. Proceedings. First International Conference on. IEEE, 2005.
[19] J. Kennedy and R. Eberhart, "Particle swarm optimization," in Proc. IEEE Int. Conf. Neural Netw., Piscataway, NJ, USA, Nov./Dec. 1995,pp. 1942–1948.
[20] Y. Del Valle, G. K. Venayagamoorthy, S. Mohagheghi, J.-C. Hernandez,and R. G. Harley, "Particle swarm optimization: Basic concepts, variants and applications in power systems,"IEEE Trans. Evol. Comput., vol. 12, no. 2, pp. 171–195, Apr. 2008.
[21] R. V. Kulkarni and G. K. Venayagamoorthy, "Particle swarm optimization in wireless-sensor networks: A brief survey," IEEE Trans.Syst., Man, Cybern. C, Appl. Rev., vol. 41, no. 2, pp. 262–267,Mar. 2011.[17] X. Wang, S. Wang, and J.-J. Ma, "An improved co-evolutionary particle swarm optimization for wireless sensor networks with dynamic deployment," Sensors, vol. 7, no. 3, pp. 354–370, 2007.