Efficient Energy Management System

Dr. K Kumarasamy
Department of Electrical & Electronics Engineering
Vel Tech High Tech Engineering College, Avadi, Chennai-600 062

Princy T
Department of Electrical & Electronics Engineering
Vel Tech High Tech Engineering College, Avadi, Chennai-600 062

Sowmya S
Department of Electrical & Electronics Engineering
Vel Tech High Tech Engineering College, Avadi, Chennai-600 062

Abstract

This paper deals with the implementation of power line network in the field of electricity billing. In present scenario the power line communication is one of the economical ways of communication of data. Even though there are new methods of wireless communication methods, practically it is very much time consuming to install such a system, and also it is highly cost consuming method .But the power lines which already exist and connect every household in a particular area is more advantageous as it does not require any new installation or erection for establishment of communication channel, and thus it is not a time consuming one. One biggest advantage of this system is that it can be readily implemented, unlike the other modern methods. The power line network can also be used for creating emergency response networks. This project eliminates the need for employing EB meter readers and this set of employees can be used elsewhere. The long queues in the billing counter can be avoided by implementing this model. Also the control of the system is fully automated by this technique. The most important feature in this system is the use of digital meters consisting of micro controllers and real time clock, thus eliminating the loss of meter data during power failure. . This paper makes the Indians to use the "Electricity" in an efficient way by introducing "Pre-paid electricity billing system" which alters a bit of our existing system .As our current system has a postpaid billing system i.e., we have to pay our electricity bill based on our consumption. This postpaid system doesn't create any awareness to the customer though the electricity bill makes them shock and there is also a possibility of power theft, in addition to that we need a person from Electricity board to take reading at every month, for the payment of bill we have to stand in a queue and another way of payment is through online but it doesn't reach more. In the Pre-paid system each house is incorporated with pre-paid card holder where each customer is provided with a smart card based on his need one have to recharge it which is similar to mobile recharge. This system creates a general awareness to utilize the power in an efficient manner. Thus in the Pre-paid system we have to monitor the number of units consumed by each customer by using power line carrier modem where transmission and reception of data occur in our existing power line and a modified Automatic meter reading.

Keywords- Power Line Carrier, ATMEGA16, ADE7751, ULN2003

I. INTRODUCTION

The advancement of technology, all the conventional systems need an amendment. This is applicable to electric billing also. Our country adopts a very conventional method of electricity billing wherein personnel from the electricity board notes down the meter reading from all the buildings in the locality. As the billing is done manually the probabilities of errors and manipulations while observing will be more .Using automation the drawbacks of the present system can be eliminated and the system can be made more efficient. The automation of energy meter billing essentially consists of 3 sections, vis microcontroller, processor IC, and modem. The first section is the energy meter section where the energy consumed by the consumer is calculated. A CT and PT of the specified rating is used. The output of the processor IC is a digital pulse which depends upon the load used. These pulses are given as the input to the second section through the opt coupler. The second section is the heart of the project consisting of the microcontroller. For every 1000 pulse the microcontroller receives it increases the number of units consumed by the consumer by 1, which is stored in the EEPROM. This is then displayed in LCD. The third section consists of the MODEM which is a transceiver i.e. it can receive as well as transmit data. The modem receives the input from the microcontroller and transmits it to the EB side. These are received by the modem placed in the EB side and sent to the PC. The tariffs are calculated using VB by the PC and sent to the microcontroller through the same pair of MODEM. Hence the number of units consumed and the amount is displayed in the LCD.

A. Power Circuit

The 230V AC input is reduced to 5V DC in this section. Here we are using a step down transformer which will reduce the 230V to 12V AC, and then it is given to rectification unit where it is converted to 5V DC. Finally the output is regulated by regulator 7805.

B. Block Diagram

1) Consumer Side

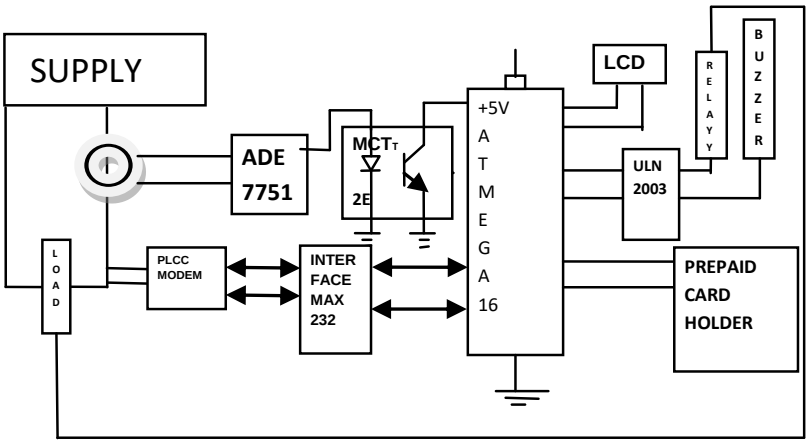

Fig. 1: Consumer Side

2) EB Side

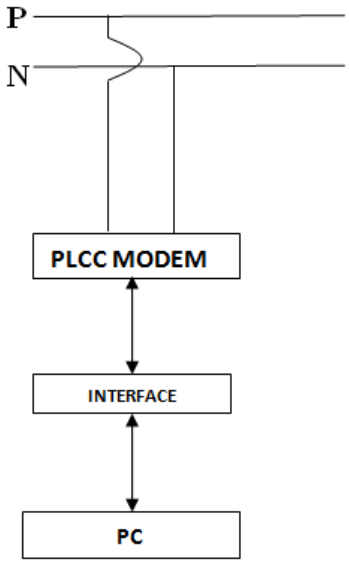

Fig. 2: EB Side

C. System Design

The "Efficient Energy Management System" consists of the following sections

1) Energy Meter Section
2) Microcontroller Section
3) EB Section

1) Energy Meter Section

This section consists of 2 CTs a PT an ADE7751. The 2 CTs are the phase and neutral current transformer. A PT and a CT is used to measure the power consumed by the consumer. The ADE7751 is an analog to digital converter which converts the analog signal from the transformers to digital pulses and feeds it to the microcontroller. The 2 CTs are required as during a fault condition the ADE7751 will take the greater value of the two currents.

2) Microcontroller Section

This section consists of the followings,

The Microcontroller we are using is ATMEGA16. It is 4 port 40 pin IC. It has 32 programmable I/O lines. It can hold upto131 powerful instructions. Its operating voltage is from 4.5-5.5V. The frequency of operation is up to 16MHZ.The OPTOCOUPLER being used is MCT2E. The opt coupler is a NPN silicon planar photo transistor and it is optically coupled and electrically isolated. This prevents any transients from affecting the microcontroller. The EEPROM is EE24C04 is used to store the output of the microcontroller permanently. Hence even in the case of a power failure the data is not lost. The interface used is MAX232.

This is used to control the speed of data transfer between MODEM and the microcontroller. The MODEM used here is PLCC MODEM. This is used to transmit the data received from the microcontroller to the EB side and from the EB side to the microcontroller using the existing power lines. It does at a frequency of 150 KHz. As a result of this the external noise is totally reduced.

3) EB Section

It consists of Modem, Interface and a PC. The PC is fed with all the slabs for the calculation of bills for the number of units consumed. Once the PC receives the number of units consumed by the consumer it calculates the bill using the slabs fed in it. It then sends this to the microcontroller through the same pair of MODEMS. Then the units consumed and the corresponding cost is displayed in the LCD.

D. Theory of Operation

As described in section 1.1, the 230V AC is converted to +5V regulated DC output through the regulator and filter circuit. This +5V is fed to the ATMEGA16microcontroller. The atmega16 has 40 pins and four ports.

1) Consumer Side

The plcc modem is connected to atmega16 through TXD and RXD pin of port D. Since the plcc modem is placed in the existing power lines itself it makes an economical means of data transfer in a bi-directional communication. The plcc modem is placed at both sides of the consumers and EB station. The usage of power in the consumer side is recorded by ATMEGA16 microcontroller which has a real time counter with separate oscillator whose maximum frequency of operation is 16 MHZ. The real time counter of ATMEGA16 is incremented to 1 unit for every 750 revolutions and it is recorded by an Automatic energy meter reader which is optically coupled with an ATMEGA16 microcontroller. The numbers of consumed units are displayed on 2x16 Liquid Crystal Display (LCD), which is connected to the port B of ATMEGA16.The microcontroller incorporated with 512 bytes of EPROM where the number of units consumed by the customer is stored. The stored data is send to the EB station through the plcc modem. The consumer is provided with a prepaid card holder which is connected to the port C of microcontroller at the pins 22 and 23.In addition to the above requirement the customer is provided with a buzzer which is driven by an ULN2003 driver through an ATMEGA16 microcontroller of port B. The buzzer is provided to indicate the customer that their validity of prepaid charge is declined. Even after the indication of buzzer, if the customer is failed to charge again then the supply is tripped automatically by electromagnetic relay.

2) EB Side

The collected data in the consumer side is transferred to the EB station through a plcc modem. The transferred data is send to the pc of EB side. The PC is fed with all the slabs for the calculation of bills for the number of units consumed. Once the PC receives the number of units consumed by the consumer it calculates the bill using the slabs fed in it. It then sends this to the microcontroller through the same pair of MODEMS. Then the units consumed and the corresponding cost is displayed in the LCD. As the home appliances consume less power compared to the industries. During the time of power shedding down in the EB station, the power can be shredded only to the industries which will consume more power. The separation of power shedding to the different loads can be done by the electromagnetic relay which is connected at the consumer side by an ULN2003 driver.

E. Flowchart

1) EB Side

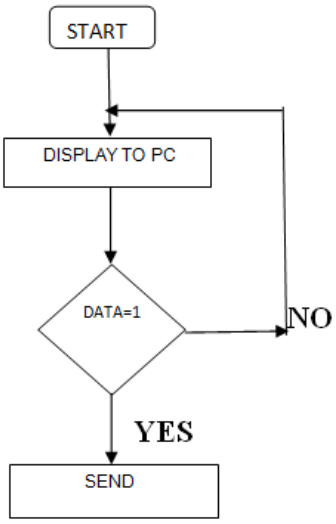

Fig. 3: EB Side

2) Consumer Side

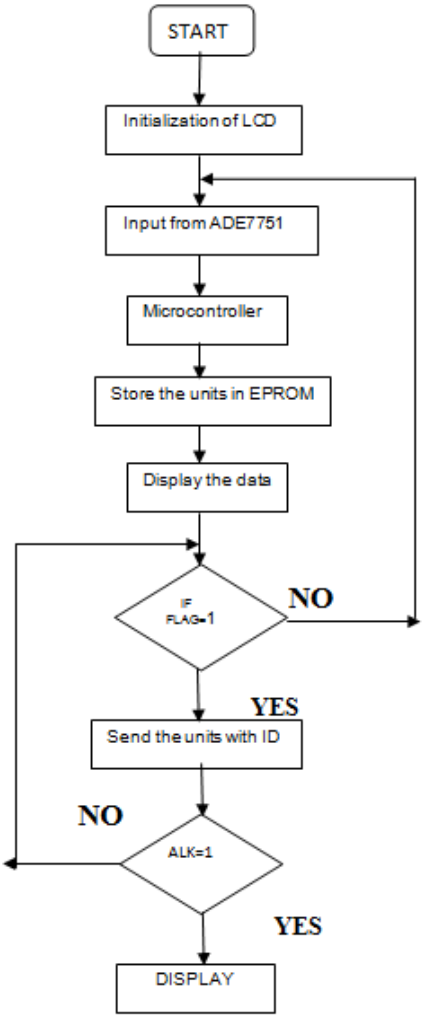

Fig. 4: Consumer Side

II. RESULT

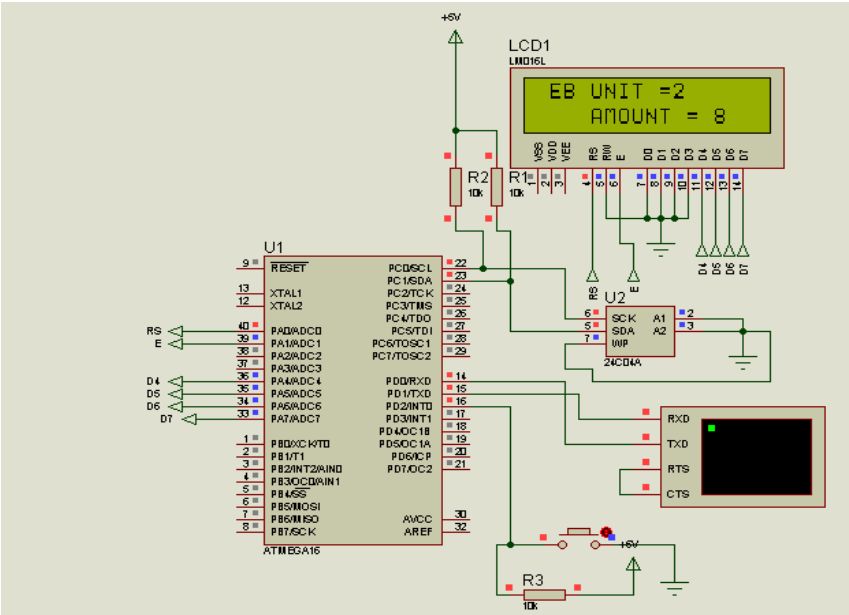

Fig. 5: Result

ATMEGA16 is used as a real time counter in which each unit is incremented for every 1000 pulses. ADE7751 is an electrical energy measurement IC which has a tendency to convert real power to the equivalent current pulses. As per the instrumentation of pulses the unit is calculated and displays to the consumer through LCD .Here prepaid holder is used where the customer can easily recharge their amount and the respective customer details are stored in the memory unit of microcontroller EPROM.

III. CONCLUSION

An effective energy policy is an important element of any economic plan. The oil crisis in the 1970s woke governments to the dangers of the uncontrolled and unplanned use of energy. The sudden rise in oil prices gave many places the incentive to look at tariffs and other means of depressing demand. It is therefore in the interest of the Government to see that electricity is used efficiently and that the people have access to steady and reliable electricity.

The aim to use the instituted PLCC network not only to carry control message flow, but it also been used in electricity billing and to spot out the area of power theft.

Thus in this paper we developed the proposed prepaid billing system which is implemented in an economical manner by initializing the existing power carrier line cable making the installation task more easier. Even the illiterate people can access the proposed system in an efficient manner by making the bill payment more convenient to the customer. So this system creates awareness among the customer about the power which they are consuming and they can even limit their power consumption level. Ultimately by this system power conservation is achieved both in customer and EB station. If any violation is encounter while comparing the consumed unit of customer and the produced unit in the EB side, thereby it can be concluded that there is a power theft in that particular street. Then the effective action can be executed in the EB side.

REFERENCES

[1] A. Ipakchi and F. Albuyeh, “Grid of the future,” IEEE Power & Energy Mag., vol. 7, no. 2, pp. 52–62, Mar./Apr. 2009.
[2] Y. Yan, Y. Qian, H. Sharif, and D. Tipper, “A survey on smart grid communication infrastructures: Motivations, requirements and challenges,” IEEE Commun. Surveys Tuts., vol. 15, no. 1, pp. 5–20, Feb. 2013.
[3] S. Galli, A. Scaglione, and Z. Wang, “For the grid and through the grid: The role of power line communications in the smart grid,” Proc. IEEE, vol. 99, no. 6, pp. 998–1027, Jun. 2011.
[4] HomePlug AV Specification, Version 1.1. HomePlug Powerline Alliance, May 2007.
[5] Draft Standard for Broadband Over Power Line Networks: Medium Access Control and Physical Layer Specifications, IEEE P1901/D4.01, pp. 1–1589, Dec. 31, 2010 [Online]. Available: http://grouper.ieee.org/groups/1901/index.html
[6] M. Antoniali, A. Tonello, M. Lenardon, and A. Qualizza, “Measurements and analysis of PLC channels in a cruise ship,” in Proc. IEEE Int. Symp. Power Line Communication. Appl. (ISPLC), Apr. 2011, pp. 102–107.
[7] S. Galli and O. Logvinov, “Recent developments in the standardization of power line communications within the IEEE,” IEEE Commun. Mag., vol. 46, no. 7, pp. 64–71, Jul. 2008.
[8] D. Anastasiadou and T. Antonakopoulos, “Multipath characterization of indoor power-line networks,” IEEE Trans. Power Del., vol. 20, no. 1, pp. 90–99, Jan. 2005.
[9] M. Zimmermann and K. Dostert, “A multipath model for the power line channel,” IEEE Trans. Commun., vol. 50, no. 4, pp. 553–559, Apr. 2002.
[10] M. Zimmermann and K. Dostert, “Analysis and modeling of impulsive noise in broad-band powerline communications,” IEEE Trans. Electromagn. Compat., vol. 44, no. 1, pp. 249–258, Feb. 2002.
[11] G. Bumiller, L. Lampe, and H. Hrasnica, “Power line communication networks for large-scale control and automation systems,” IEEE Commun. Mag., vol. 48, no. 4, pp. 106–113, Mar. 2010.
[12] X. Cheng, R. Cao, and L. Yang, “On the system capacity of relay aided power line communications,” in Proc. IEEE Int. Symp. Power Line Commun. Appl. (ISPLC), Apr. 2011, pp. 170–175.
[13] X. Cheng, R. Cao, and L. Yang, “Relay-aided amplify-and-forward power line communications,” IEEE Trans. Smart Grid, vol. 4, no. 1, pp. 265–272, Mar. 2013.
[14] B. Tan and J. Thompson, “Relay transmission protocols for in-door power line Communications networks,” in Proc. IEEE Int. Conf. Commun. Workshops (ICC), Jun. 2011, pp. 1–5.
[15] M. Biagi, S. Greco, and L. Lampe, “Location assisted routing techniques for power line communication in smart grids,” in Proc. IEEE Int. Conf. Smart Grid Commun. (SmartGridComm), Oct. 2010, pp. 274–278.
[16] M. Biagi, S. Greco, and L. Lampe, “Neighbourhood-knowledge based GEO-routing in PLC,” in Proc. IEEE Int. Symp. Power Line Commun. Appl. (ISPLC), Mar. 2012, pp. 7–12.
[17] V. B. Balakirsky and A. J. H. Vinck, “Potential performance of PLC systems composed of several communication links,” in Proc. Int. Symp. Power Line Commun. Appl., Apr. 2005, pp. 12–16.
[18] A. Sarafi, A. Voulkidis, and P. Cottis, “Optimal TDMA scheduling in tree based power-line communication networks,” IEEE Trans. Power Del., vol. 29, no. 5, pp. 2189–2196, Oct. 2014.
[19] L. Lampe and A. Vinck, “Cooperative multihop power line communications,” in Proc. 16th IEEE Int. Symp. Power Line Commun. Appl. (ISPLC), Mar. 2012, pp. 1–6.
[20] I. Rubin, Y.-Y. Lin, and D. Kofman, “Relay-aided networking for power line communications,” in Proc. Inf. Theory Appl. Workshop (ITA), Feb. 2014, pp. 1–6.
[21] E. Liu, Y. Gao, G. Samdani, O. Mukhtar, and T. Korhonen, “Broadband power line channel and capacity analysis,” in Proc. IEEE Int. Symp. Power Line Commun. Appl. (ISPLC), Apr. 2005, pp. 7–11.
[22] I. Rubin, A. Baiocchi, F. Cuomo, and P. Salvo, “GPS aided inter-vehicular wireless networking,” in Proc. Inf. Theory Appl. Workshop (ITA), Feb. 2013, pp. 1–9.