Welding of Plastics through Hot Gas Technique: A Review

Hoomam Ahamad
Lecturer
Department of Mechanical Engineering
University Polytechnic, Integral University, Lucknow

Mahmood Alam
Assistant Professor
Department of Mechanical Engineering
Integral University, Lucknow

Md Shakibul Haque
Senior Lecturer
Department of Mechanical Engineering
University Polytechnic, Integral University, Lucknow

Shyam Narayan Pandey
Lecturer
Department of Mechanical Engineering
University Polytechnic, Integral University, Lucknow

Mohd. Amanuddin
Lecturer
Department of Mechanical Engineering
University Polytechnic, Integral University, Lucknow

Abstract

The goal of this paper is to provide the basic fundamentals of hot gas plastic welding technique. Use of polymers in industries is increasing in order to reduce overall weight of products. Polymers are generally joined by mechanical fastening, adhesive bonding and welding. This article shows that welding of polymers is still a growing research and development area particularly hot gas welding technique because of increasing aspiration for environment friendly technologies and light weight material. This review will be beneficial for young researchers working in this area and this technique opens the door for further investigation for improving weld quality.

Keywords- P.V.C., Hot gas welding, Plastic, Temperature, Joining

I. INTRODUCTION

In the early 20th century efforts in material science became focused on developing a material which could offer the mechanical features of metals and ceramics but itself being of low density and easy workability. So in 1910 first synthetic polymer and polymeric composites was developed. Nowadays polymers have been developed which are as strong as metals and in some cases stronger than metals. Polymers have been developed with improved mechanical properties but also having chemical and corrosion resistance.

The use of plastics in industries has increased with improvement in its mechanical and other properties. The joining of polymers is done by mechanical fastening, adhesive joining and welding. Plastics are classified as thermoset and thermoplastic. Thermoset plastic can be joined by mechanical fastening and adhesive joining only, as it cannot be resoftened. But since thermoplastics can be resoftened, it can be welded. There are different welding methods as shown in Fig 1.

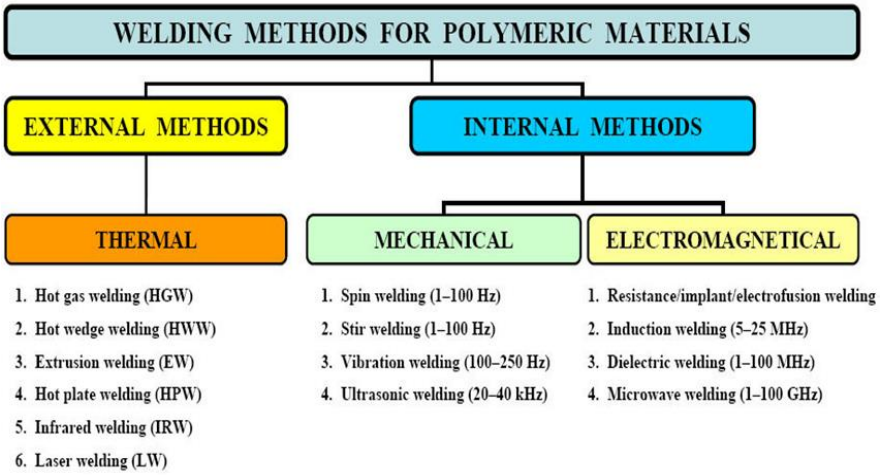

Fig. 1: Classification of welding methods for polymeric materials.

II. HOT GAS TECHNIQUE

In 1940 Reinhardt patented the hot gas welding method. It is an external heating method. It is simple, portable and cheap welding method used for fabrication of chemical containers, repair of large injection moulded components.

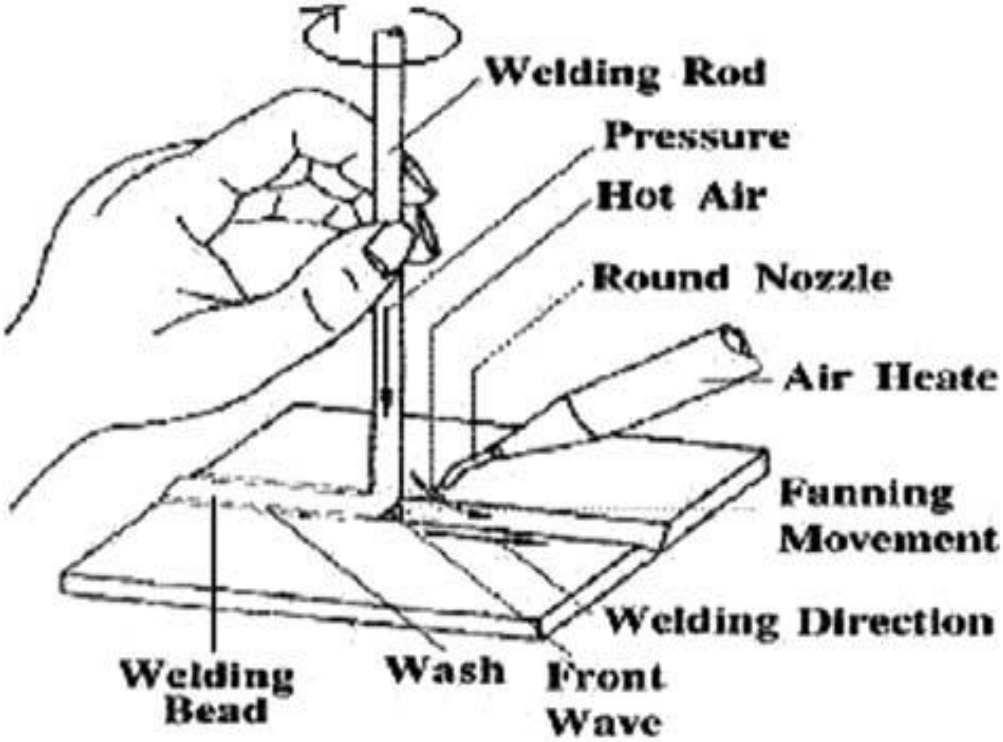

Fig. 2: Schematic of hot gas welding, showing the correct position of torch and filler rod for plastic.

Above is the schematic illustration of hot gas welding process. By using hot gas stream a welding rod and weld groove are heated until they get softened sufficiently for fusion with each other. A hot gas stream is directed at filler rod and weld joint using a hot gas gun. We can use air, nitrogen, carbon dioxide and other inert gases for welding. Then the welding rod is pressed for proper penetration in the joint prepared as shown in fig 2. The cross sectional shape of welding rod can be round, oval, triangular and rectangular according to the shape of joint. The temperature of hot gas stream used for welding can vary from 175° to 600° C depending upon the material to be welded.

Table 1: Different types of plastics with welding temperature.

Plastic	*Welding temperature (˚C)*
ABS	*350*
Acrylic	*350*
Hypalon	*600*
Polyethylene	*250-300*
Polyisobutylene	*600*
PVC	*220-300*

The success of hot gas welding technique largely depends upon the skills of welding operator as there are many process parameters which are to be manually controlled. Some of the process parameters are shown in Table 2.

Table 2: Process parameter for hot gas welding

Process parameters	*Description*
Temperature	*Temperature of hot gas*
Gas	*Composition of hot gas (air, carbon dioxide, hydrogen, oxygen or nitrogen*
Angle	*Include angle between weldment and rod, angle between gas nozzle and weldment.*
Weld speed	*Rate at which weld is being deposited*
Weld force	*Amount of force applied to the filler rod*
Filler rod	*Composition of filler rod*
Gap distance	*Distance between gas nozzle and Workpiece*
Weld joint	*Type of joint (v, x, u butt joint or lap)*
Pressure of hot air gas	*Pressure of gas at which it coming out from nozzle*
Shoe	*Design and size of welding nozzle*

III. BASIC WELDING STEPS

A. Joint Preparation

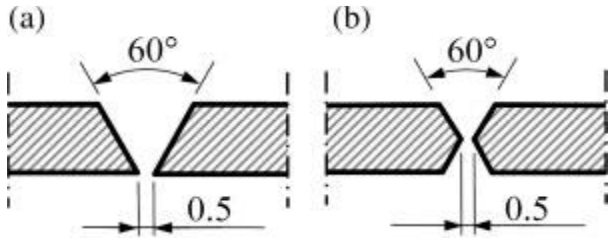

Fig. 3: Geometries of weld grooves (y–z plane). (a) Single V-weld groove. (b) Double V-weld groove.

Joint preparation plays a vital role in success of welding. The surface is cleaned with Luke warm water, mild soap and methyl ketone to remove foreign particles such as dirt, oil and grease etc. We can make butt as well as lap joint. In case of butt, the strength of double V joint is maximum.

B. Heating & Pressing

For proper joining of plastic, we need hot gas, supplied by hot gas torch. The construction of hot gas gun is as shown in Fig 4. Hot gas stream is directed towards the joint to increase the temperature of welding rod and workpiece to make them tacky. Then pressure is applied on welding rod for proper joining.

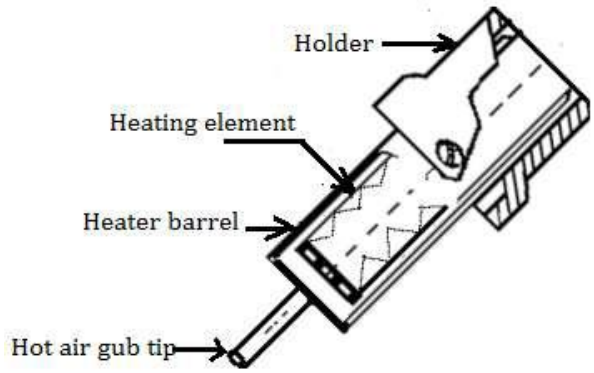

Fig. 4: Basic elements of hot air gun

Table 3: Technical specification of hot air gun

Power input	*230V/50Hz*
Power consumption	*550W*
Pump	*Diaphragm pump*
Temperature	*100°- 480°C (rotary knob adjustment)*
Air flow rate	*Maximum 23 L/min(setting)*

1) Use of Welding Shoe

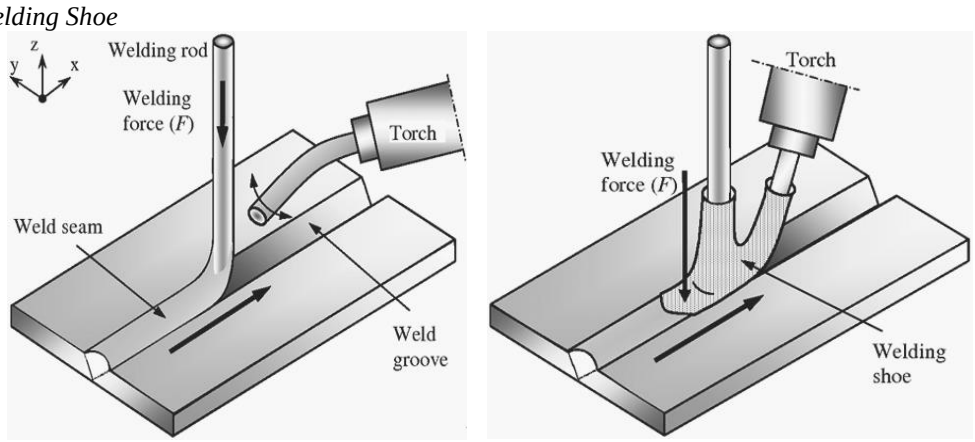

(a) (b)

Fig. 5: Schematic representation of hot gas welding; (a) Without welding shoe, (b) With welding shoe.

The use of welding shoe for facilitating welding operation is done which integrates the welding torch and welding rod is schematically illustrated in Fig 5b. This apparatus is known as "high speed welding nozzle". It is used for increasing the pressure applied on welding rod, intensive heating of surfaces and to increase the welding speed.

C. Diffusion and Cooling

Interfaces heal together by diffusion and molecular entanglement after interfaces conformity. Interface healing occurs by diffusion of polymer chains across the interfaces. Fig .6 shows the mechanism of healing at various times and degrees of healing. In case of complete healing under ideal conditions the migration of polymer chains occurs across each side to become indistinguishable from the parent material.

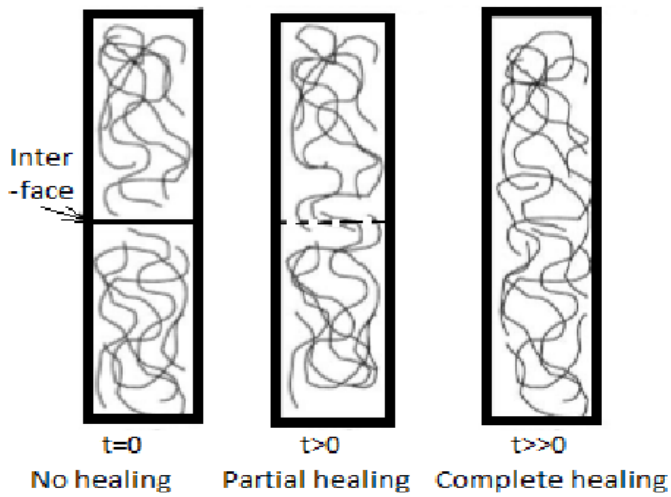

Fig. 6: Details of intermolecular healing of interface over time.

Cooling and re-solidification of polymer at joint is final stage of hot gas welding of plastics. Amorphous plastics retain random orientation while semi-crystalline matrices re-crystallize for final micro structure.

IV. CONCLUSION

From the critical literature review related to plastic welding, it can be concluded that although very less work is done in this area but still there is huge scope for research in order to investigate the aspects responsible for high quality welding of plastic or polymers. After the study of available literature, the researchers have reported that final weld joint is weaker than the base material. Thermal degradation due to high temperature of gas and oxidation may be amongst the few reason for weakness of joint. Use of nitrogen and other inert gases can be done in order to prevent oxidation. Use of proper jigs and fixtures as well as roller can be done to increase the welding pressure applied on welding rod for proper fusion.

ACKNOWLEDGMENT

I would like to thank my M.Tech Guide, Er.Mahmood Alam, for his encouragement and advice he provided to me. In particular I would like to thank Er.Anees Siddiqui for the suggestions he made in reference to this work.

REFERENCES

[1] Vijay Kumar, M.I. Khan Development of Welding Procedure for Rigid P.V.C. Plastic by Hot Air Technique.
[2] Empirical modelling relating weld current of hot air and welding speed to stiffness of hot air welded P.V.C plastic. By "Mahmood Alam, Reyaz Ur Rehman and Mohd. Suhail. (ijtra) – Volume 2 issue 1, Jan-Feb 2015.
[3] State- Of- The Art in rigid P.V.C plastic welding by hot air technique. By "Mahmood Alam, Dr M.I. Khan. (ijtra) – Volume 1, issue 2 May-June 2013.
[4] Study and Empirical Modelling Relating Welding Parameters and Tensile Strength of Hot Air Welded PVC Plastics. By "Mahmood Alam, Dr Shahnawaz Alam, Kamran Rasheed. (ijtra)- Vol. 2 issue 2, February 2015.
[5] M. Rojek a, J. Stabik a, *, G. Muzia. Thermography in Plastics Welding Processes assessment VOLUME 41 ISSUES 1-2 July- August 2010
[6] Thomas H.North and Geetha Ramarathnam, University of Toranto Welding of Plastics.
[7] O. Balkan a, *, H. Demirer b, H. Yildirim c Morphological and Mechanical Properties of Hot Gas Welded PE, PP and PVC sheets VOLUME 31 ISSUES 1 November 2008.
[8] W. S. Alley/ P. N. Baker Chapter-2 Joining and Assembly of Plastics, Volume-2 Identification, Testing and Recycling of Plastics, Handbook of plastic technology.
[9] Thermally Bonded PVC seams Phase 1 "State- Of- The- Art & Preliminary Welding windows Tri/Environmental, INC, A Texas research international company.
[10] D. Grewell. A. Benatar Agricultural and Biosystems Engineering. Iowa State University, Ames, IA, USA Welding of plastic: Fundamentals and New developments.

[11] James D. Van de Ven, Arthur G Erdman, Mechanical Engineering Department, University of Minnesota, Minnesota 55455, Hot Pin Welding of Thin Poly (vinyl Chloride) sheet.
[12] Joining of plastics and composites –Mladen Sercer, university of Zagreb, Croatia. Pero Roas, University of Osijek, Croatia.
[13] American plastic welding technologies, Hot Air Welding Guide for Plastic Repairs www.bak-ag.com
[14] A text book of Welding Technology O. P. Khanna.
[15] R.P. Wool, Molecular aspects of tack, Rubber chemistry and technology 57/2 (1982) 307-319.
[16] Guide Line for Welding Thermoplastic Materials (Hot gas hand and hot gas extrusion welding), WEGENER WELDING EXPERTS, www.wegenerwelding.com.
[17] Md Shakibul Haque, Inayat Hussain, Athar Hussain and Mohd Anees Siddiqui, An Experimental Analysis to Determine the Effects of WeldingParameters on Tensile Strength of Hot Air Welded Poly VinylChloride (PVC) Plastic, Samridhi -JPSET: Vol. 7, Issue 2, ISSN: 2229-7111 (Print) & ISSN: 2454-5767 (Online).
[18] Md Shakibul Haque, Inayat Hussain, Proff.(Dr.) Athar Hussain, Mohd Anees Siddiqui, Proff.(Dr.) Mohd. Ibrahim Khan, Study and Experimental Modelling of Welding Parameters on Hardness of Hot Air Welded Poly Vinyl Chloride (PVC) Plastic, IJSRD - International Journal for Scientific Research & Development| Vol. 3, Issue 10, 2015 | ISSN (online): 2321-0613
[19] Md Shakibul Haque, Inayat Hussain, Gaurav Agarwal, Khwaja Moeed, Mohd Anees Siddiqui, Experimental Analysis of Mechanical Behaviour of Poly Vinyl Chloride (PVC) Plastic Welded through the Fabricated Experimental Set-up for Hot Air Welding, IJSRD - International Journal for Scientific Research & Development| Vol. 3, Issue 11, 2016 | ISSN (online): 2321-0613
[20] Md Shakibul Haque, Manoj Kumar, Adnan Khan, Hot Gas Welding of Plastic: Fundamentals & Importance, IJST Vol. 8 issue 4, December 2015 Edition (Printed: ISSN 0973-8940Online: ISSN 2454-762X)