A Review on Tool Flank Wear Monitoring by Tool Condition Monitoring System using Various Approaches

Raghavendra M J
Assistant Professor
Department of Mechanical Engineering
Srinivas Institute of Technology, Mangalore-574 143, Karnataka

Dr. Ramachandra C G
Professor and Head
Department of Mechanical Engineering
Srinivas Institute of Technology, Mangalore-574 143, Karnataka

Dr. T. R. Srinivas
Professor
Department of Mechanical Engineering
S.J College of Engineering, Mysore-570 006,Karnataka

PrashanthPai
Associate Professor
Department of Mechanical Engineering
P.A College of Engineering, Mangalore-574153,Karnataka

Abstract

Increasing demands of process automation for un-manned manufacturing attracted many researchers in the field of on-line monitoring of machining processes. In view of this, extensive research work is taking place world-wide in the area of on-line tool condition monitoring system. Tool wear is the most undesirable characteristic of machining processes as it adversely affects the tool life, which is of foremost importance in metal cutting owing to its direct impact on the surface quality of the machined surface, and its dimensional accuracy, and consequently, the economics of machining operations. Tool wear has negative effects on surface quality, dimensional precision of work piece, and may even cause a harmful effect on safe operation of total machining system. According to the research, about 20% machine downtime is caused by the tool wear. In addition, the cost of cutting tool and tool changing is about 3–12% of the total machining cost and method for on-machine tool progressive monitoring of tool flank wear by processing the turned component. Therefore, methods for cutting tool wear in an over view of the maximum use of cutting tools. With an effective monitoring system, the wear and damages to the machine tool, downtime, lead time and scrapped components can be avoided. This paper provides brief overview on tool condition monitoring.

Keywords- Tool Condition Monitoring; Signal and Acquisition Processing; Acoustic Emission; Vibration Signals, Turning

I. INTRODUCTION

Productivity is a key strategy for manufacturing companies to stay competitive in a continuously growing global market. Increased productivity can be achieved through increased availability. Total maintenance cost is always spent unnecessarily due to circumstances such as improper planning, overtime costs, poor usage of work order systems, improper use of preventive maintenance, etc. Condition based maintenance is a group of maintenance that utilizes condition monitoring techniques in order to determine the current condition of an equipment and thereby plan the maintenance schedule [1]. Condition monitoring is the process that assesses the health of an equipment at regular intervals or continuously and exposes incipient faults. CBM can drastically reduce operating costs and increase the safety of assets requiring maintenance. The condition monitoring can be decided through highly complex equipment with measurements, such as vibration, temperature, shock pulse measurements etc., or by human's subjective senses, such as sight, smell, hearing and touch. Modern manufacturing technologies are continually tending towards automation of the production process due to increasing demand for high productivity. For automation in metal cutting operations, the Tool Condition Monitoring (TCM) system is an essential requirement for optimization of machining operations and reduction of cost of tooling The production quality is influenced by different parameter that can be optimized by the manufacturer (like speed, feed, and tool material)[2]. Usually, the quality lowers continuously with the amount of manufactured components because of the tool wear and it can worsen abruptly due to tool defects. In order to keep the fabrication tolerances within the acceptable deviation, the manufacturing tools are replaced regularly. In any metal cutting process, tool wear means the gradual failure of cutting tools due to regular operation. As cutting proceeds, the amount of tool wears increases which directly affect the tool life. Carrying on the machining process with a worn tool, can increases the friction between the tool and the work piece and also increases the power consumption [1, 2].

Worn tool produces a rough surface of work piece, distortions in dimension and also causes vibration in the system. Early replacement of a workable tool or late replacement of a worn tool may cause time and/or production loss. Sometimes late replacement of worn tool may cause unpredictable machine breakdown at any time. Hence to avoid catastrophic tool failure, there

is a real need to monitor the progression of cutting tool wear from the beginning of the cutting process. With an effective monitoring system, worn tool can be changed in time to avoid unexpected downtime and scrapped components. In view of this, extensive research work is taking place world-wide in the area of online tool condition monitoring system. Tool wear sensing helps in the optimum use of tools and several methods have been proposed by researchers. Increasing demands of process automation for un-manned manufacturing attracted many researchers in the field of on-line monitoring of machining processes [1, 2, and 3]. In view of this, extensive research work is taking place world-wide in the area of on-line tool condition monitoring system (TCMS). Tool wear is the most undesirable characteristic of machining processes as it adversely affects the tool life, which is of foremost importance in metal cutting owing to its direct impact on the surface quality of the machined surface, and its dimensional accuracy, and consequently, the economics of machining operations. Therefore, methods for cutting tool wear sensing are crucial in view of the optimum use of cutting tools.

These are classified into two main groups: direct methods and indirect methods. Direct methods are based upon direct measurements of the tool wear using optical, radioactive, electrical resistance proximity sensors or vision system etc. The direct tool wear methods have the advantages of capturing actual geometric changes arising from the wear of tool [1]. However, direct measurements are less beneficial because of the cutting area is largely inaccessible and continuous contact between the tool and the work piece. Indirect methods are based on parameters measured during the cutting operation that can be correlated to wear state. In indirect method, tool condition is not captured directly but achieved from the measurable parameters through sensor signal output to predict the condition of cutting tool.

A. Tools Wear Sensing Methods:

1) Direct Methods: Electric Resistance, Optical, and Measurement of tool geometry
2) Indirect Methods: Cutting force, Vibration, Acoustic emission, Surface roughness, Torque/current etc.

The detailed analyses of these methods have been carried out in the recent years. Commonly used parameters by various researchers include cutting forces, temperature, vibrations, spindle motor current and power measured during cutting processes and acoustic emission. These indirect Methods are popular among the researchers and extensively used [3].

II. TOOL CONDITION MONITORING SYSTEM

In modern manufacturing systems, machine tools are the major equipment and play a very important role. The malfunction of machine tools may result in the halt of the whole production and bring about tremendous financial losses. With an effective tool condition monitoring damages to the machine tool, unexpected downtime and scrapped components can be avoided[7].

Typically Tool Condition Monitoring System is consist of sensors, signal conditioners/amplifiers, monitor. Sensor is a key element and have to be placed as close as possible to the target location (close to the tool tip) being monitored. Signal processing is then carried out to obtain useful information from the signals received through the sensors. The monitor is display unit used to analyze signal from the sensor [7, 21].

A. Four Steps of Indirect Type Tool Condition Monitoring System (TCMS):

1) Collection of data in terms of signals from sensors such as cutting force, vibration, temperature, acoustic emission and/or motor current,
2) Signal processing and extraction of features from the signals,
3) Estimation of tool wears using pattern recognition, fuzzy logic, neural networks, or regression analysis.
4) Development of decision making technique to control the machining process based on information from the sensors.

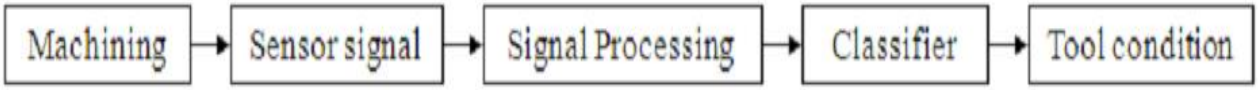

Fig. 1: Block diagram of TCMS

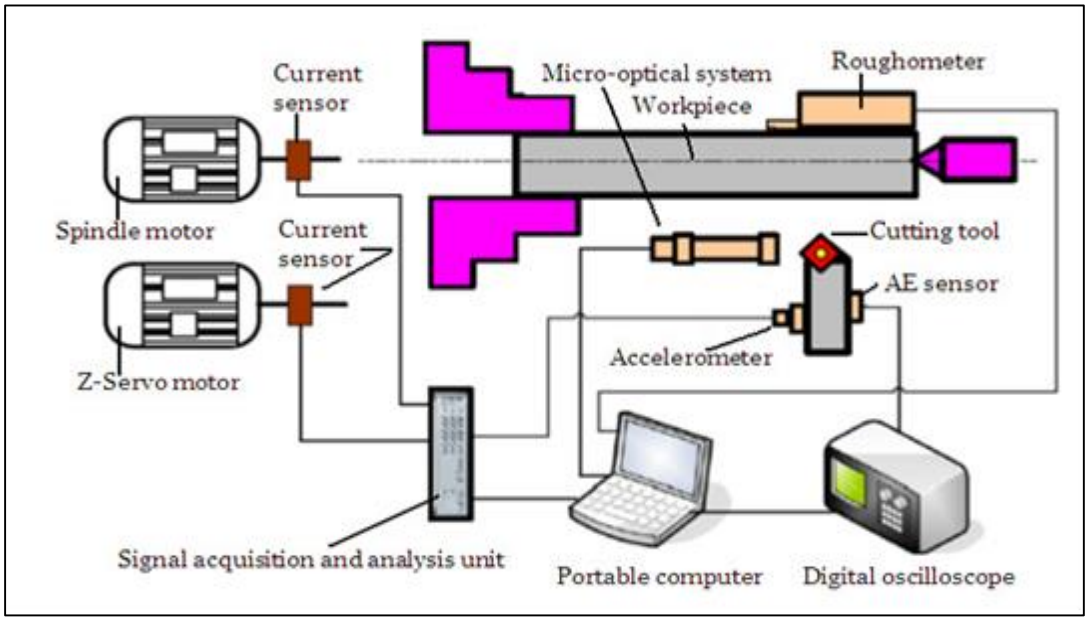

Fig. 2: Schematic of tool condition monitoring system.

III. PROCESS PARAMETERS

Variety of process parameters can be detected and used to predict the cutting tool state. The process parameters mainly include force, vibration, acoustics signals, current, temperature etc. The brief overview of process measurement [21] are discussed below

A. Vibration Analysis and Diagnostics:

A body is said to vibrate when it describes an oscillating motion about a reference position. The number of times a complete motion cycle takes place during the period of one second is called the Frequency and is measured in hertz (Hz). Vibration transducers produce complex time series waveforms, within which are many specific signatures. It is important to understand these different vibration signatures and how to properly extract them for trending analysis [8]. With proper signature information, it becomes possible to tabulate specific metrics which can drive plant maintenance or production schedules. There are a variety of different types of signal complexities, corresponding to different sound and vibration phenomena as represented [9].

- Some signals have a long time duration but narrow bandwidth such as rub & buzz noise.
- Some signals have a short time duration but wide bandwidth such as impacts or transients.
- Some signals have a short time duration and narrow bandwidth such as decayed resonance.
- Some signals have a time-varying bandwidth such as an imbalanced shaft generating noise dependent on RPM or machine speed.

Vibration signals are one of the most widely used by many researchers because they provide thorough insight in metal cutting process. Accelerometer is used as the sensing elements device to measure vibration response. Mechanical vibrations are produced by the cyclic variations in the machine components and due to the dynamic interactions between the cutting tool and the work piece. Tool vibration reduces the performance of machining operations also results in poor surface quality, tool wear and reduced tool life and creates unpleasant noise[10].Vibration independent of metal cutting which includes forced vibration caused by other machines or machine components, i.e. vibration transmitted through foundations, unbalance of rotating parts, inertia forces of reciprocating parts and kinematic inaccuracies of drives.

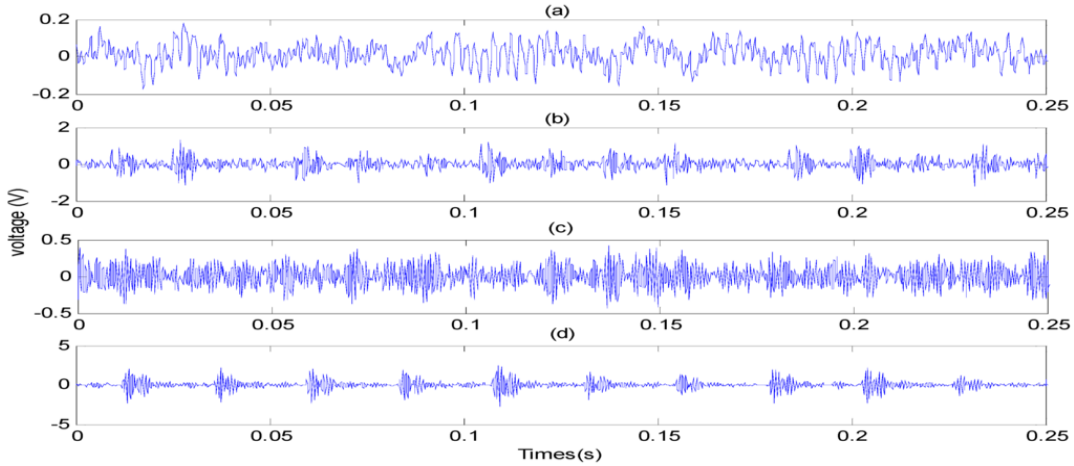

Fig. 3: Vibration signals in frequency and time domain.

Vibration analysis for tool condition monitoring is presented by many researchers. Alonso and Salgado, developed tool condition monitoring based on tool vibration signals using singular spectrum analysis (SSA) and cluster analysis [8]. SSA is a non-parametric technique of time series analysis that decomposes the acquired tool vibration signals into an additive set of time series. Dimla and Lister have used accelerometer to measure vibration signals in three mutually perpendicular directions. Time and frequency domain analysis is carried out to predict tool wear [8]. Dimla and M Sortino considered vibration signals to establish the correlation between surface roughness and cutting vibration during turning. The surface roughness has been measured using Surtronic 3+ measuring instrument. FFT analyser used to measure tool vibration in radial direction and feed direction [8].Alonso and Salgado, developed tool condition monitoring based on tool vibration signals using singular spectrum analysis (SSA) and cluster analysis. SSA is a non-parametric technique of time series analysis that decomposes the acquired tool vibration signals into an additive set of time series [7].

B. Acoustic Emission (Airborne Ultrasound):

During metal cutting process, work piece undergoes plastic deformation as the tool penetrates in it. Due to deformation, the transient elastic waves are generated by the rapid release of energy from a localized source or sources within a material. This released energy is commonly referred to as acoustic emission. According to Li [12], an Acoustic Emission (AE) is a sound wave or, more properly, a stress wave that travels through a material as the result of some sudden release of strain energy. Other sources of AE include phase transformations, friction due to tool-work piece contact, crack formation, chip breakage, collision between chip and tool and tool fracture.Valerie G. Cook has shown Using Transmitted Sound the conventional AE approach was employed by adding the capability of intelligent tool wear monitoring focus mainly on separating background noise from the noise of the tool itself, and methods to automate the recognition of tool wear conditions in sound signatures. Current state of research in the sound monitoring of tool condition in machine shops. Satyanarayana Kosaraju & Venu Gopal Anne & Bangaru Babu Popuri[14]have shown how to predict tool wear using acoustic emission (AE) in turning carbide tools. Finding out root mean value of AE at the tool chip finding out the progression of flank wear in carbide tool And analysed using energy-dispersive X-ray spectroscopy technique to determine the nature of wear. Xiaozhi Chen. Beizhi Li [17]et al, have identified testing of a condition-monitoring the acoustic emission (AE) signals contain potentially valuable information for tool wear and breakage monitoring and detection and the sensitivity of AE to tool wear and fracture is coupled with a high response rate of the signal. And the advantages of the wavelet multi-scale resolution method were Compared to the wavelet resolution coefficient modulus maxima, wavelet resolution coefficient norm is a more stable and useful AE character parameter for providing information on cutting tool condition monitoring.

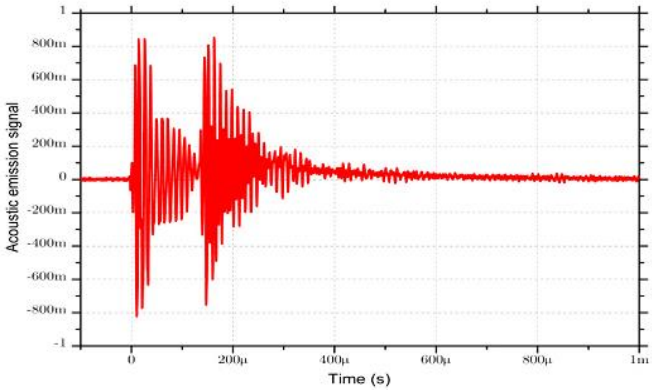

Fig. 4: Typical AE signals in turning.

C. Cutting Force Measurements:

Gradual increase in tool wear during the cutting process causes the cutting forces to increase. Therefore cutting force is generally considered one of the most significant indicators of tool wear in the metal cutting process. Many Researchers uses cutting force to establish the relation with tool wear.Samikdulta and surjya k pal [4] have described the relationship between flank wear area and cutting forces for turning operations. The experimental results showed that there is an increase in the three directional components of the cutting force with increase in flank wear area. C Liu, C F Wang [3] has developed an on-line tool wear monitoring system for turning operation. They have used tool-post dynamometer as a force sensor to measure all three mutually perpendicular components of the cutting force.

D. Motor Condition Monitoring and Motor Current Signature Analysis (MCSA)

Motor current is used by most of the researcher to define the cutting tool condition. A worn tool requires more cutting forces than a sharp tool thus resulting in more input power. In addition, the current sensor does not require a pre-assembly for signal acquisition. Researchers have shown more interest in motor current measurement due to its low costing and non-disturbance to machining process [12]. From the literature, it is observed that the measurement of current is a little tough and little expensive. Where ever there is a difficulty in detecting the small change in the current caused by the cutting process compared to the current needed to rotate the spindle for big motors. Xiaozhi Chen [17] has also used different machining parameter including spindle motor current to estimate tool wear. X. Q. Chen & H. Z. Li [13] have monitored current signals in order to developed tool condition monitoring system.

E. Surface Finish or Roughness

Roughness is surface irregularities which result from the various machining process. Surface roughness is a widely used index of a machined product quality which indirectly indicates the tool condition. The cutting condition has a considerable effect on the tool wear and surface roughness. Feng Ding & Zhengjia [19] have monitored tool condition by analyzing surface roughness and it is concluded that feed rate is the significant parameter for affecting surface parameter. Ricardo R. Moura & Márcio B. da Silva [5] have measured surface roughness and tool flank wear over the machining time for variety of cutting conditions in finish hard turning. Mehdi Nouria, Barry K. Fussell [6] shown that the regenerative vibration or chatter accelerates tool wear resulting in poor surface finish and in turn reduces tool life. From the literature it is concluded that surface roughness is good indicator to estimate tool wear condition.

F. Temperature (Infrared Thermography):

In metal cutting processes, heat generation is normal phenomenon and it is unavoidable. The resulting high temperature around the cutting tool tip damages the cutting tool. Tool wear rate is depends upon the cutting tool temperature. Many attempts have been made to correlate cutting edges temperatures to tool wear. Alan Hase & Masaki Wada [18] have developed regression analysis (RA) and artificial neural network (ANN) model for prediction of tool-chip interface temperature and validated it experimentally. It was observed, proposed model have good accuracy and suitable. Samik Dutta [4] has presented the methods of measurement of temperature during material removal and showed how they can be applied to temperature monitoring during material removal. From the literature Cutting temperature may give a good indication of tool wear but accuracy of these methods is questionable as it depends upon the thermal properties of the work piece and tooling material.

G. Non-Conventional Methods:

Varieties of methods have been employed in various attempts in monitoring the tool condition. Some of the methods have been reported by various researchers which mainly include optical methods like Lubricant analysis [12], stress/strain measurement[20,21], methods based on measuring the work piece dimension, Ultrasound testing (Material Thickness/Flaw Testing), sound, chip formation, and Torque[20]

IV. DATA COLLECTION AND ANALYSIS

Data acquisition is a process of collecting and storing useful data from targeted physical assets for obtaining meaningful information by different types of sensors such as accelerometer, AE sensors, ultrasonic, infrared, optical camera and sensors etc., have been used for collecting various types of signals. The signals captured from the machine can be vibrational signals, acoustic signals, temperature, current, etc. Generally captured signals are raw signals and required processing to extract significant features out of them [10, 12]. The most of the values which correlate with tool wear and not affected by process conditions are extracted from the captured signals. The analysis of signal can be done in time domain, frequency domain, time-frequency domain, statistical domain. Most of the researchers have focused on these domains in order to obtain useful parameter for tool monitoring [8, 9, and 10].

A. Time Frequency Analysis

One of the drawbacks of frequency analysis was that, with no time domain data associated with the signal, it was only useful for static signals. Time-Frequency Analysis (sometimes called Joint Time-Frequency Analysis or JTFA) allows a work around to this problem. Time-frequency Analysis is the process of taking multiple FFT's of small portions of data, or rather data that was taken

over a short period of time. If the FFT's are taken of small enough portions of data the frequencies will not have had time to change, these FFT's can then be combined to see how the power spectrum of a signal changes over time [8]. More advanced approaches of time-domain analysis apply time series models to waveform data. The advantage of frequency-domain analysis over time-domain analysis is its ability to easily identify and isolate certain frequency components of interest [12].

B. Wavelet Analysis

Wavelet analysis is appropriate for characterizing machine vibration signatures with narrow band-width frequencies lasting for a short time period [4]. Wavelets are used as the reference in wavelet analysis and are defined as signals with two properties: admissibility and regularity. Admissibility means that a wavelet reference, or mother wavelet, must have a band-pass-limited spectrum. Admissibility also means that wavelets must have a zero average in the time domain which implies that wavelets must be oscillatory [31].

C. Time Domain and Frequency Domain Analysis

Time domain analysis refers to a display of response parameter as a function of time. Features in the time domain are mostly determined for force signals. More advanced approaches of time-domain analysis apply time series models to waveform data. The main models include Auto Regressive (AR), Moving Average (MA) and Auto Regressive Moving Average (ARMA [20,21]. Frequency domain analysis is based on the transformed signal in frequency domain. Features of the vibration and sound signals are generally extracted using the frequency domain. For this purpose, fast Fourier transform (FFT) is the most widely used. The advantage of frequency-domain analysis over time-domain analysis is its ability to easily identify and isolate certain frequency components of interest [19].

V. RESULTS AND DECISIONS

Decision making strategies plays very important role in the development of automated machining process and tool condition monitoring. Artificial Intelligent based techniques have been increasingly applied to machine diagnosis and have shown improved performance over conventional approaches. Several different approaches have been proposed to automate the tool monitoring function including pattern recognition, neural networks, fuzzy logic, acoustic emission techniques, stress/strain analysis and genetic algorithms. Recently researchers reported Artificial Neural network, ANFIS modeling algorithm[5,6,7], Hidden Markov model, Singular Spectrum Analysis[18,20,21], Discreet wavelet transformation, state of the ART[11,,12,13,14], artificial intelligence process, Decision tree and Support Vector Machine and successfully applied in many cases. Iin recent research reported neural network classifiers and have been employed by many researchers due to its merits such as high fault tolerance, noise suppression capability and data-driven nature [16, 17, and 18].In acquiring the process parameter, sensors plays very important role. Many researchers have used sensors to increase the confidence limit of machining process. However research should be carried to in the direction of smart sensor. Most of the researcher used variety of techniques to carry out each phase of tool condition monitoring. Such phases include, choice of the parameters to be captured, feature extraction, feature selection and feature classification. Researchers have contributed toward condition monitoring studies that are computationally simple here is a need to develop advanced signal acquisition and processing technique to carried feature extraction without being affected process parameters and tool work piece material combination[20, 21, 22, and 24].Generally speaking, the simpler a TCM system is, the less likely Reliability was rated as being the most important concern by those actually using some form of TCM obviously vital to minimize the complexity of any future TCM system. While ANNs and similar intelligent systems offer attractive accuracy rates, it has been shown that simple force models can be just as accurate

VI. CONCLUSIONS

In today's competitive world, continuous monitoring of tool condition is essential to maintain the quality of finished product. The development of practical and reliable condition monitoring system for detecting flank wear in turning operation is essential for realization of intelligent and flexible manufacturing systems. In this study, the problem of detection of flank wear in turning operation has been studied using vibration and strain measurement methods. The use of newly-designed or custom-made sensors is more prevalent for those machining operations with straight edged cutters. Based on the current study, the correlation dimension can be a criterion as the cutting tool condition monitoring a threshold value can be set up by correlating the work piece surface quality. Vibration and strain monitoring during turning operation can be useful for predicting flank wear. For this purpose, frequency domain analyses have been carried out .The response of ANN is good enough to classify the flank wear at different levels. With an effective monitoring system, worn tool can be changed in time to avoid unexpected downtime and scrapped components. Artificial intelligent base models and proper decision technique could develop reliable, rebuts tool condition monitoring system. An approach to model the AE signal generated at the chip–tool contact was presented for the online tool condition monitoring while machining a progressive flank wear at different time intervals. The AE signal increases with the increase in flank wear and is mainly distributed in the frequency range of 30–60 kHz and experimental values with a maximum error of 2.32 %. The methodology presented in this work proves that it is possible to predict the AE signal and thereby monitor the condition of the tool online.

REFERENCES

[1] I.P.S. Ahuja, J.S. Khamba, (2008) "Total productive maintenance: literature review and directions", International Journal of Quality& Reliability Management, Vol.25 Iss: 7, pp.709 - 756.
[2] Tamer H. Haddad and Dr. Ayham A.M. Jaaron,"The Applicability of Total Productive Maintenance for Healthcare Facilities: an Implementation Methodology",Vol. 1, Issue 1 (Apr. - Jun. 2015).
[3] C. Liu, G.F. Wang∗Z.M. Li "Incremental learning for online tool condition monitoring usingEllipsoid ARTMAP network model"35 (2015) 186–198.
[4] Samik Dutta, Surjya K. Pal, Ranjan Sen. "Progressive tool flank wear monitoring by applying discretewavelet transform on turned surface images"77 (2016) 388–401.
[5] Ricardo R. Mouran, Márcio B. da Silva, Álisson R. Machado, Wisley F. Sales "The effect of application of cuttingfluid with solid lubricant insuspension during cutting of Ti-6Al-4V allo"332-333 (2015) 762–771.
[6] Mehdi Nouria, Barry K. Fussell,n, Beth L. Zinit, Ernst Linder "Real-time tool wear monitoring in milling using a cutting conditionindependent method"89 (2015) 1–13.
[7] Aliustaoglu C, Ertunc HM, Ocak H. Tool wear condition monitoring using a sensor fusion model based on fuzzy inference system. Mechanical Systems and Signal Processing 2009; 23:539–546.
[8] DimlaSr DE, Lister PM. On-line metal cutting tool condition monitoring. I: force and vibration analyses, International Journal of Machine Tools & Manufacture 2000; 40:739–768.
[9] Li X. A brief review: acoustic emission method for tool wear monitoring during turning. International Journal of Machine Tools and Manufacture 2002; 42 (2):157–165.
[10] H. Chelladurai. K. Jain&N. S. Vyas "Development of a cutting tool condition monitoring systemfor high speed turning operation by vibrationand strain analysis" (2008) 37:471–485.
[11] Adam G. Rehorn · Jin Jiang · Peter E. Orban "State-of-the-art methods and results in tool condition monitoring" (2005) 26: 693–710.
[12] Ahmet Cakan "Real-time monitoring of flank wear behavior of ceramicutting tool in turning hardened steels" (2011) 52:897–903.
[13] FranciČuš - UrošŽuperl* "Real-Time Cutting Tool Condition Monitoring in Milling"57(2011)2, 142-150.
[14] X. Q. Chen&H. Z. Li "Development of a tool wear observer model for online toolcondition monitoring and control in machiningnickel-based alloys"(2009) 45:786–800.
[15] Satyanarayana Kosaraju& Venu Gopal Anne&Bangaru Babu Popuri "Online tool condition monitoring in turning titanium (grade 5) using acoustic emission: modeling" (2013) 67:1947–1954.
[16] A. Siddhpura&R. Paurobally "A review of flank wear prediction methods for tool conditionmonitoring in a turning process" 2013) 65:371–393.
[17] Xiaozhi Chen.Beizhi Li "Acoustic emission method for tool condition monitoringbased on wavelet analysis"33: (2007) 968–976.
[18] Alan Hase&MasakiWada&ToshihikoKoga&Hiroshi Mishina "The relationship between acoustic emission signals and cuttingphenomena in turning process" (2014) 70:947–955.
[19] Feng Ding&Zhengjia He "Cutting tool wear monitoring for reliability analysisusing proportional hazards model" (2011) 57:565–574.
[20] NitinAmbhorea*, Dinesh Kambleb, SatishChinchanikar, Vishal Wayal "Tool condition monitoring system: A review"2 (2015) 3419 – 3428.
[21] P Kulandaivelu, Senthil Kumar and S Sundaram, "Wear monitoring of single point cutting tool using acousticemission techniques"Vol. 38, Part 2, April 2013, pp. 211–234.