Review of Feasibility and Use of Infinite Variable Transmission in Lathe Machine

Aakash Shah
M.E. Machine Design
Department of Mechanical Engineering
B.V.M. Engineering College V.V.Nagar, Anand (Gujarat)

Prof. B.S. Patel
Associated Professor
Department of Mechanical Engineering
B.V.M. Engineering College V.V.Nagar, Anand (Gujarat)

Prof. J.P. Hadiya
Assistant Professor
Department of Mechanical Engineering
B.V.M. Engineering College V.V.Nagar, Anand (Gujarat)

Abstract

In today's scenario objective of manufacturing industries to produce product of low cost, high quality in short time. Which give more quality product in less time and help in increase in industry's profit this is done by selection of correct machine tool lets us focus on lathe, as we all know lathe machine is basic (generic) machine in manufacturing industry and maximum work is taken from it. Lathe machine works on three cutting parameter. That's why the selection of correct cutting parameter is important. In lathe machine cutting parameters are depth of cut, feed rate and spindle speed (cutting speed). But as we know the spindle speed is limited and every material has their own optimum cutting speed. So that we focused on spindle speed generally power is transmit by gearbox and stepped cone pulley so that the output spindle speed is limited generally in kirloskar harihar D-1 lathe machine uses cone stepped pulley and number of output spindle speed is eight that is from four direct speeds and four from back gear.
Keywords- Lathe Machine, Spindle Speed, I.V.T. (C.V.T.), Lathe Machine, Turning Process

I. INTRODUCTION

Lathe is a machine tool used to remove unwanted material from a given work piece to get desired shape. It is generally used for machining cylindrical work pieces. The origins of lathe can be traced back to Ancient Egypt and ancient Greece. In ancient Egypt, two-person lathes were extensively used. In a two-person lathe, one person would turn the wood (work piece) and the other person would cut the wood with a single point cutting tool. Cutting operation in this lathe involved a lot of manual labor and consumed a large amount of time. In Ancient Rome, the Egyptian Design was modified. A turning bow was used to turn the work piece. In the medieval period, pedals were used to turn and cut the work piece. The pedals were operated by human legs. The origin of modern lathe can be traced back to the time when the Industrial Revolution took place. The Industrial Revolution brought a lot of changes to the world of machines. During that golden period, a number of mechanisms were introduced to lathe. These mechanisms enabled humans to operate lathe semi-automatically. Power generated from steam engines were used to drive lathes. The introduction of electrically powered lathe in the twentieth century, made lathe a versatile, automatically functioning machine tool. Today, lathe is one of the basic machine tools widely used in industries.

Motive of this paper to review for importance of Infinite Variable Transmission for lathe to achieve infinitely variable cutting or spindle speed between maximum and minimum limit (reach optimum cutting speed). Cutting speed (spindle speed) plays important role in manufacturing time, surface finish, heat generation and tool life. Generally lathe machine perform many operation but for our calculation, experiment and analysis convenient we have selected one operation for which we optimize the spindle cutting speed.

II. REVIEW FOR LATHE

Literature review is carried out for finding the importance of variations of spindle speed. And to show the effect of spindle speed on lathe operation. Here we have done work on turning operation for our calculation, experiment and analysis convenient this literature review is for cutting timing (production or manufacturing timing), surface finish, tool wear, and power consumption. During this review we also find that every engineering material has their own different optimum cutting speed.

A. Cutting Timing (Production or Manufacturing Time)

S. S. K. Deepak[1] had studied about production timing of turning process and result curves obtained between production time and cutting speed reveal that a smaller value of cutting speed in a high production time. It is due to the fact that a smaller cutting speed increases the production time of parts. Also, it will decrease the profit rate due to the production of a lesser number of parts.

However, if the cutting speed is too high, it will also lead to a high production time due to excessive tool wear and increased machine downtime. The optimum cutting speed is somewhere between "too slow" and "too fast" which will yield the minimum production time.

B. Surface Finish

S.Magibalan[2], M. Prabu[2], P.Vignesh[2], P.Senthikumar[2] had perform experiment about surface roughness during turning operation and while machining Titanium grade 5 alloy material with TNMG 160404 insert, the feed has greater influence on the surface roughness followed by the cutting speed. From the analysis it is revealed that the feed, cutting speed and depth of cut are prominent factors which affect the turning operations. For better surface finish parametric combinations of depth of cut 1 mm, feed rate 0.05 mm/rev and cutting speed 190 m/min.

B.Tulasiramarao [3], Dr.K.Srinavas [3], Dr. P Ram reddy [3], A.Raveendra and Dr.B.V.R.Ravikumar [3] they have study and perform experiment and they have identified the values of the optimum cutting parameters to get the minimum Surface roughness. They have arrived on a conclusion that the minimum surface roughness in stainless steel is obtained when the Spindle speed is (1200 rpm approx.), Depth of cut and Feed Rate are minimum (i.e 0.2 mm and 0.15 mm respectively). In case of aluminum the minimum surface is obtained when the spindle speed is (800 rpm approx), Depth of cut and Feed Rate are minimum (i.e 0.3 mm and 0.15 respectively).

K. Adarsh Kumar [4], Ch.Ratnam, BSN Murthy, B.Satish Ben and K. Raghu Ram Mohan Reddy has find surface roughness for face turning operation using EN-8. The relationship between feed rate and surface roughness is proportional.

G J Pavan Kumar and R LalithaNarayana[5] had concludedBases of the experimental results it is observed that, surface roughness value increases as the feed and depth of cut increases and as the spindle speed increases the surface roughness value decreases. The minimum surface roughness value is observed at spindle speed of 150 rpm, feed of 0.05 mm/rev and a depth of cut of 0.2 mm respectively.

C. Tool Wear

Viktor P. Astakhov[6] has find as a result, the influence of the cutting feed on the tool wear rate is different at different cutting speeds. The diameter of the hole being machined affects the cutting process significantly in boring operations. In the range of optimum cutting speeds, the smaller the diameter of the hole being machined, the smaller the optimum cutting speed, the greater the chip compression ratio, and, thus, the work of plastic deformation, the greater the tool wear rate.

D. Power Consumption

Richard Geo, Jose SherilD'cotha [7] took experiment. In the experimental work it is clearly revealed that the rpm is the main influencing factor power consumption of tool and feed rate has the lowest influencing parameter. From the comparison of the tools it was found that during turning of EN- 24 steel rod with both tools the HSS tool consumes more power than the carbide tool.

III. REVIEW FOR POWER TRANSMISSION IN CONVENTIONAL LATHE IN SPINDLE

It is very important to understand that how spindle get power for rotation because in lathe machine operation is done only means of rotation of job (work peace). There are 2 type of power transmission take place in conventional lathe machine that is stepped belt drive and gear drive.

A. Stepped Belt Drive

The belting system is used to produce four running rotational speeds n1, n2, n3, and n4. It is cheap and absorbs vibrations. It has the limitation of the low-speed changing, slip, and the need for more space. Based on the driver speed n1, the following speeds can be obtained in a decreasing order.

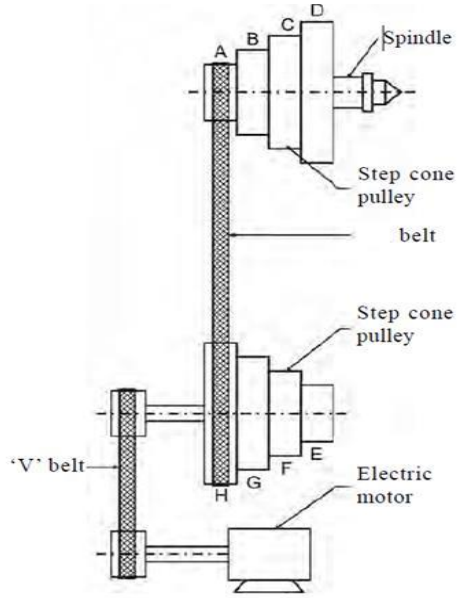

Fig. 1: Stepped belt drive

IV. IDEA OF INFINITE VARIABLE TRANSMISSION

After the review of lathe machine and power transmission of lathe we understood the importance of spindle speed in lathe machine. As we see in "review for power transmission in conventional lathe in spindle", power transmission is in stepped that means we get standard spindle speed and as we discuss above every engineering material has their own optimum cutting speed. So that we have to design new solution for power transmission for lathe. Idea of Infinite Variable Transmission and step less drive are given below

A. Friction Step Less Drive

The cone-type friction step less mechanism [8]. Accordingly, the drive shaft rotates at a constant speed n1 as well as the friction ring of diameter d. The output speed of the driven shaft rotates at a variable speed n2 that depends on the instantaneous diameter D

Because $$\frac{N_1}{D} = \frac{N_2}{d} \quad (1)$$

Hence $$N_2 = d \times \frac{N_1}{D}$$

$$F = \frac{T_1}{T2} = \frac{(\frac{d}{2})}{\frac{D}{2}} \quad (2)$$

Input torque (T_1), output torque (T_2), input radius ($\frac{d}{2}$) output radius ($\frac{D}{2}$)

Fig. 2: friction step less drive

If the power, contact pressure, transmission force, and efficiency are constant, the output torque T_1 is inversely proportional to the speed of the output shaft N_2. $T_2 \alpha T_1. N_1 / N_2$ Due to the small contact area, a certain amount of slip occurs, which makes this arrangement suitable for transmitting small torques and is limited to reduction ratios not more than 1:4.

B. Kopp Variator

The drive balls (4) mounted on inclinable axes (3) run in contact with identical, effective radii $r_1 = r_2$, and drive cones (1 and 2) are fixed on coaxial input and output shafts. When the axes of the drive balls (3) are parallel to the drive shaft axes, the input and output speeds are the same. When they are tilted, r_1 and r_2 change, which leads to the increase or decrease of the speed. Using Kopp mechanism, a speed range of 9:1, efficiency of higher than 80% and 0.25–12 h.p. capacity are obtainable.

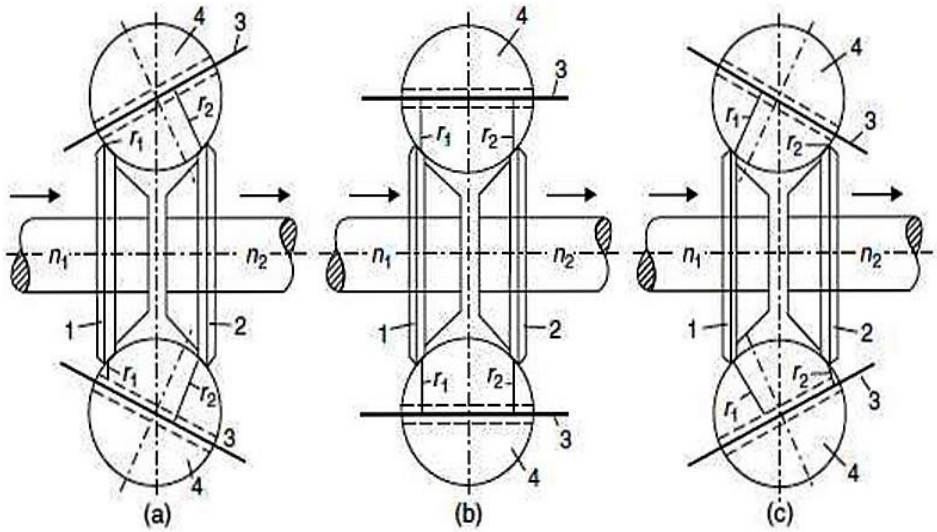

Fig. 3: Kopp Variator

Kopp step less speed mechanism: (a) $n_2 < n_1$, (b) $n_2 = n_1$, and (c) $n_2 > n_1$

C. Toroidal Mechanisms

The principle of toroidal step less speed transmission. Figure shows the Reeves variable speed transmission, which consists of a half toroidal CVT as the roller rotates around AB and CD axes transmission ratio changes continuously [10] each toroidal is made up of two conical disks. These disks slide equally and simultaneously along the shaft and rotate with it. To adjust the diameter of the pulley, the two disks on the shaft are made to approach each other so that the diameter is increased or decreased. The ratio of the driving diameter to the driven one can be easily changed and, therefore, any desired speed can be obtained without stopping the machine. Drives of this type are available with up to 8:1 speed range and 10 hp capacity [11].

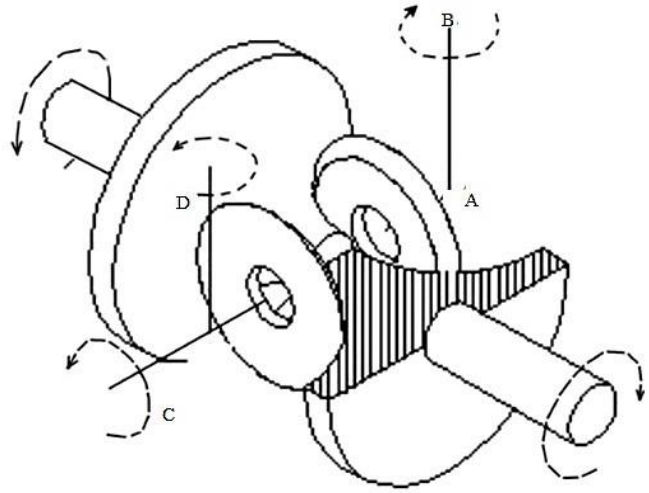

Fig. 4: Toroidal mechanisms

Reeves variable speed transmission. Toroidal step less speed transmission (a) $n_2 < n_2$, (b) $n_2 = n_1$, and (c) $n_2 > n_1$

D. Positive Infinitely Transmission Drive

Positive torque transmission arrangement that consists of two push able pulleys, each of which consists of a pair of cones that are movable along the shafts in the axial direction, and the cone is connected by V belt. [9]

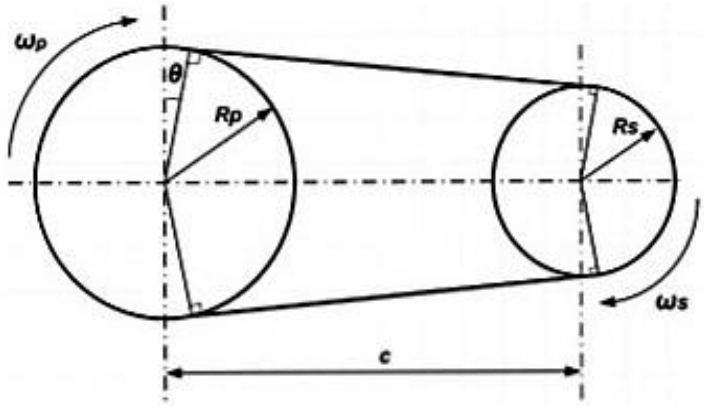

Fig. 5: Positive infinitely transmission drive

By rotating the shaft, the spring mechanism get moved thus changing the location of the pulleys, and hence the speed of rotation provides a speed ratio of up to 6 and is available with power rating up to 50 hp. We can do use of infinite variable speed units in machine tool drives and feed units is limited by their higher cost and lower efficiency or speed range.

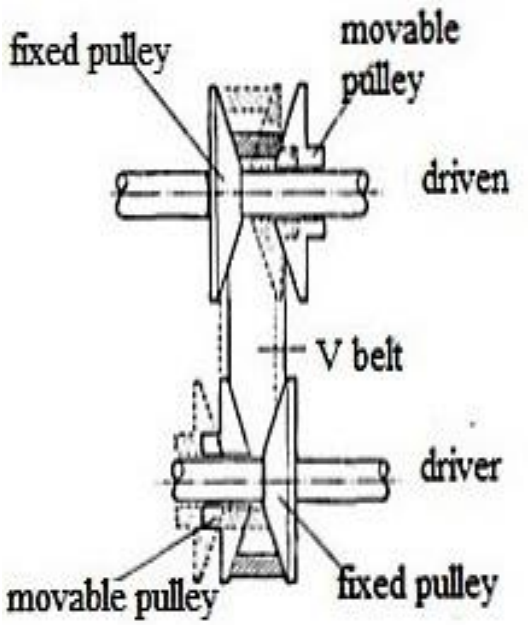

Fig. 6: Positive Infinitely Variable Drive

V. CONCLUSIONS

This review is done to show the importance of spindle speed (cutting speed), which we avoid, by changing the feed rate and depth of cut. This literature review is for design infinitely variable transmission which gives infinitely variable cutting and spindle speed which will help to optimize the lathe machine and help in minimize power loss and increase in production rate in short time.

REFERENCES

[1] S. S. K. Deepak, "Cutting Speed and Feed Rate Optimization for Minimizing Production Time of Turning Process" Department of Mechanical Engineering, Rungta Engineering College, Raipur, Chhattisgarh, India. International Journal of Modern Engineering Research (IJMER) Vol.2, Issue.5, Sep-Oct. 2012 pp-3398-3401.

[2] S.Magibalan, M. Prabu, P.Vignesh, P.Senthil kumar." Experimental Study On The Cutting Surface Roughness In Cnc Turning Operations By Using Taguchi Technique" Department of Mechanical Engineering, K.S.R College of Engineering, Tiruchengode-637215 National Conference On Recent Trends And Developments In Sustainable Green Technologies Journal of Chemical and Pharmaceutical Sciences www.jchps.com

[3] B.Tulasiramarao1, Dr.K.Srinivas2 ,Dr. P Ram Reddy3, A.Raveendra4, Dr.B.V.R.Ravi Kumar "Experimental Study On The Effect Of Cutting Parameters On Surface Finish Obtained In Cnc Turning Operation" International Journal of Innovative Research in Science, Engineering and Technology (An ISO 3297: 2007 Certified Organization) Vol. 2, Issue 9, September 2013
[4] K. Adarsh Kumar,Ch.Ratnam, BSN Murthy, B.Satish Ben, K. Raghu Ram Mohan Reddy" Optimization Of Surface Roughness In Face Turning Operation In Machining Of En-8" Assistant Professor, Department Of Mechanical Engineering, GITAM University, Visakhapatnam, [Ijesat] International Journal Of Engineering Science & Advanced Technology
[5] G J Pavan Kumar and R Lalitha Narayana" Prediction Of Surface Roughness In Turning Process Using Soft Computing Techniques" ISSN 2278 – 0149 www.ijmerr.com Vol. 4, No. 1, January 2015
[6] Viktor P. Astakhov" Effects of the cutting feed, depth of cut, and workpiece (bore) diameter on the tool wear rate" Int J Adv Manuf Technol DOI 10.1007/s00170-006-0635-y
[7] Richard Geo, Jose Sheril D'cotha" Effect of Turning Parameters on Power Consumption in EN 24 Alloy Steel using Different Cutting Tools" International Journal of Engineering Research and General Science Volume 2, Issue 6, October-November, 2014
[8] Srinath N"Cone Type CVT with High Speed Variations" RMK College of Engineering & Technology Puduvoyal, Thiruvallur,Tamil Nadu, India- 601206 International Journal of Scientific & Engineering Research, Volume 6, Issue 7, July-2015
[9] Nur Cholisa, Sugeng Ariyonob, Gigih Priyandoko" Design of single acting pulley actuator (SAPA) continuously variable transmission (CVT)" aNational Institute of Science & Technology (ISTN), Jl. Moh. Kahfi II Jagakarsa, Jakarta Selatan 12640, Indonesia, 2nd International Conference on Sustainable Energy Engineering and Application, ICSEEA 2014
[10] Tanalk H. "power transmission of cone roller toroidal traction drive"joneral of of vibration and control engg, 32, pp. 82-90
[11] M. Delkhosh"Geometrical optiiztion of half toroidal vontinously veriable transmission using particle swar ptimization",science direct page no. 1126-1132
[12] P.H. Joshi "machine tools handbook design and operation"TATA Mcgrow hill education privete LTD.